SS84236

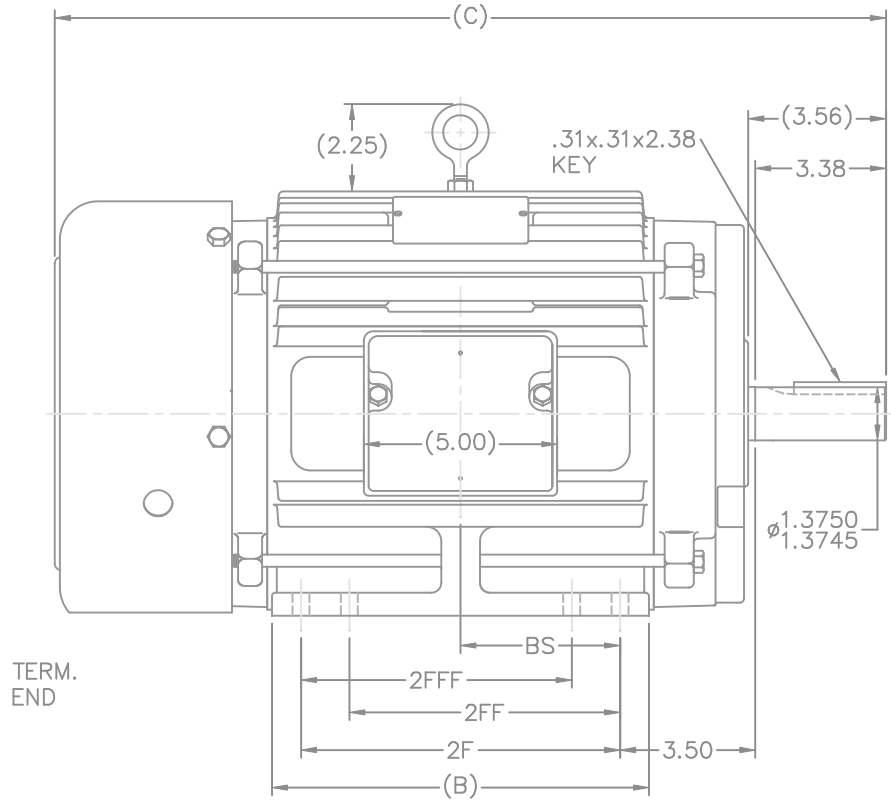

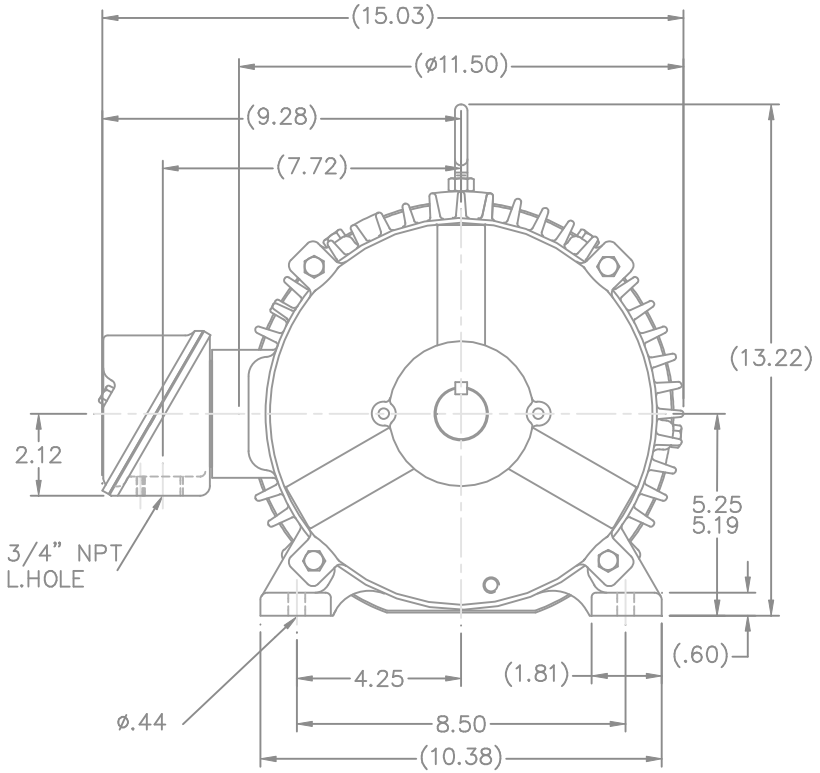

DASH	FRAME	B	2F	2FF	2FFF	BS	FOOT HOLE QTY.	MOUNTING	C CAST FAN GUARD	C STEEL FAN GUARD
725	213T	7.00	5.50	–	–	2.75	4	F1 OR F2	18.22	18.74
875	215T	8.50	7.00	–	–	3.50	4	F1 OR F2	19.72	20.24
875	213/5T	8.50	7.00	5.50	5.50	3.50	8	F1 OR F2	19.72	20.24
1000	213T	9.75	8.25	5.50	5.50	4.12	8	F1 OR F2	20.97	21.49
1000	215T	9.75	8.25	7.00	7.00	4.12	8	F1 OR F2	20.97	21.49

NOTES:
1. CONDUIT BOX CAN BE ROTATED IN 90° STEPS.
2. CONDUIT BOX CAN BE MOUNTED ON OPPOSITE SIDE BY REMOVING BRACKETS AND TURNING FRAME 180°.
3. NAMEPLATE TO BE READ FROM CONDUIT BOX SIDE OF MOTOR.

NO.	REVISION	BY & DATE	CHK
13	REMOVED NOTE "SEE TABLE FOR HOLE QTY."	RDH 11-18-2003	ML
12	-875'S FOOT HOLE QTYS. WERE SWITCHED CN37323	ERH 10-21-2003	ML
11	REVISED TABLE TO CLARIFY MOUNTINGS CN37301	TAT 9-29-2003	ML
10	CORRECTEDCONDUIT BOX VIEWS CN28426	BLR 1-5-2000	
9	REVISED CONDUIT BOX CN28426	BLR 1-4-2000	
8	REVISED DASH TABLE AND FOOT HOLE DIM.	MRB 3-26-1999	

TOLERANCES UNLESS SPECIFIED

DEC.	INCHES
.X	±.1
.XX	±.03
.XXX	±.005
.XXXX	±.0005
ANG	±7'30"

MARATHON ELECTRIC

TITLE OUTLINE
210T FR. – TEFC

MAT'L.
FINISH

DRAWN	RM	1-11-1993
CHK	ML	1-12-1993
APPD	GK	1-12-1993
SCALE	5=16	
REF		
FMF		
PREV		

THIS DRAWING IN DESIGN AND DETAIL IS OUR PROPERTY AND MUST NOT BE USED EXCEPT IN CONNECTION WITH OUR WORK ALL RIGHTS OF DESIGN AND INVENTION ARE RESERVED
THIS IS AN ELECTRONICALLY GENERATED DOCUMENT – DO NOT SCALE THIS PRINT

RFP
DIST LB
CAD FILE ss84236
SIZE B
DRAWING NO. SS84236
PAGE OF
REV. 13