Uncontrolled Copy

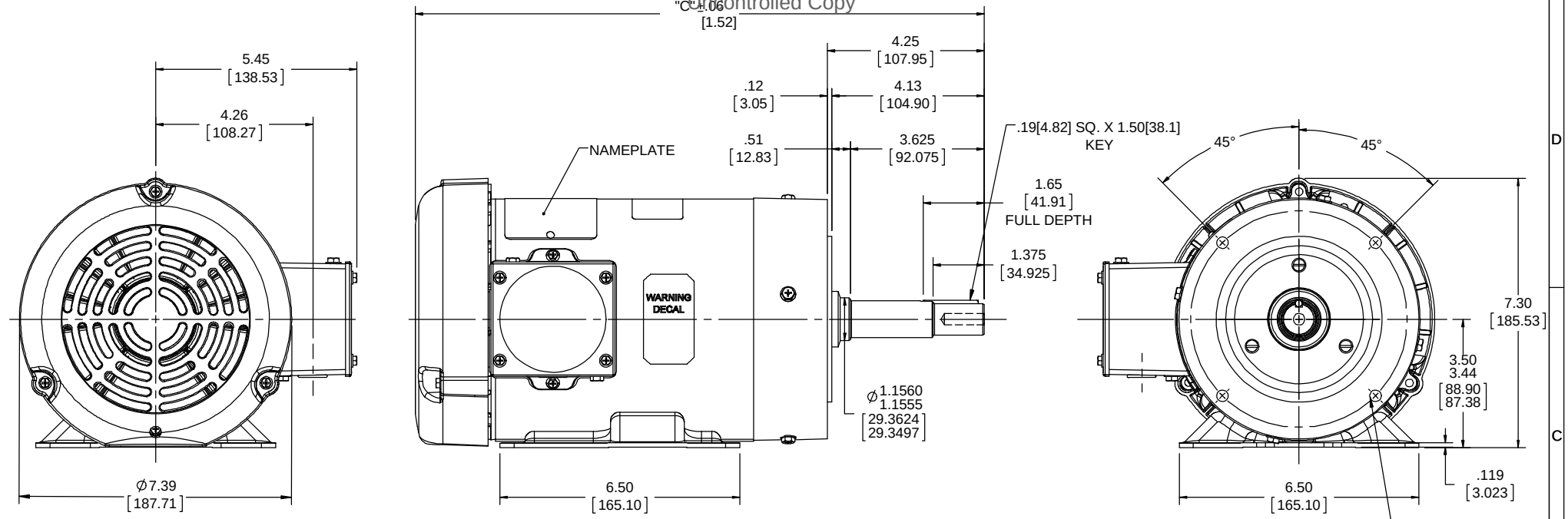

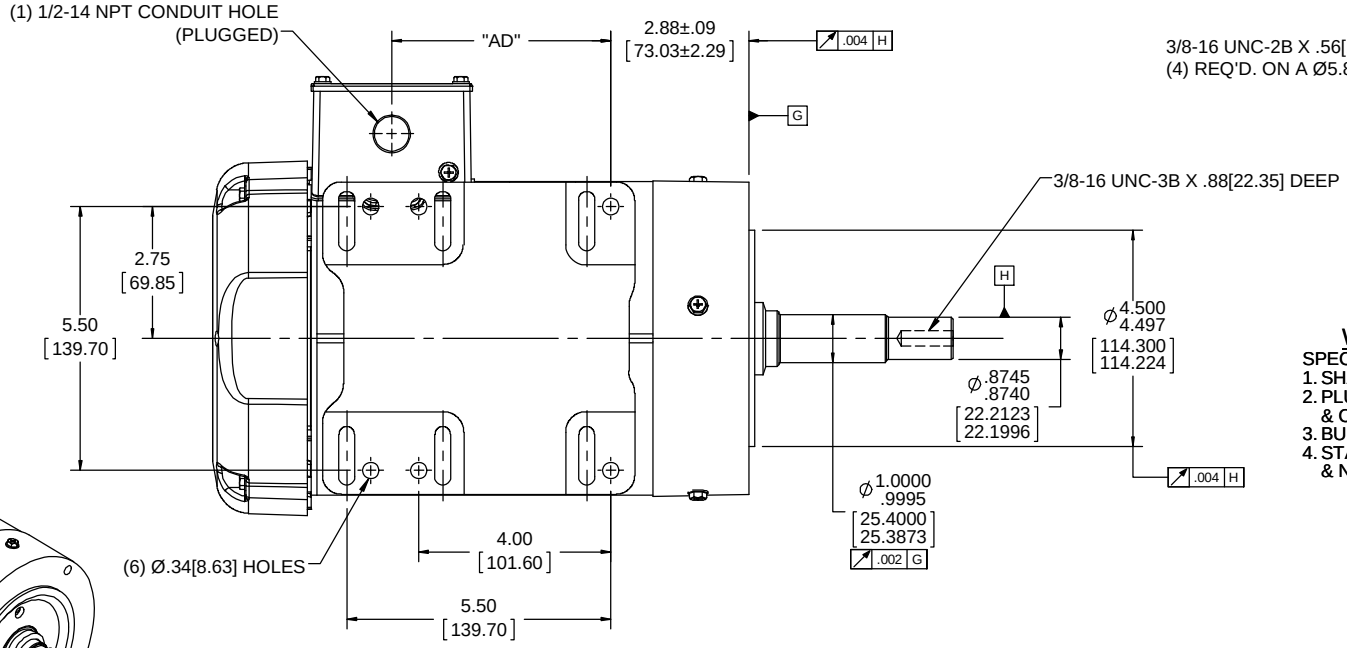

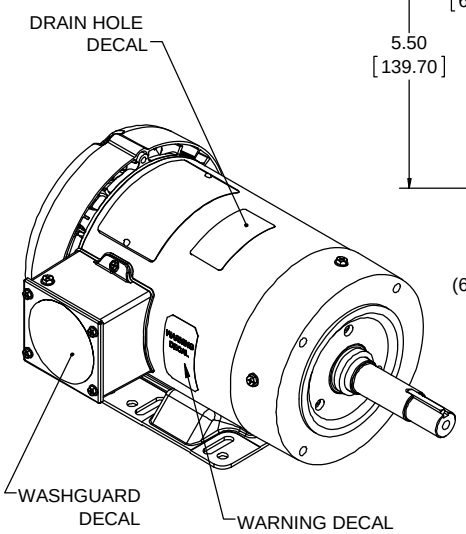

WASHGUARD MOTOR

SPECIAL FEATURES:

1. SHAFT SEALS & V-RING.
2. PLUGGED DRAIN HOLES IN ENDBELLS & CONDUIT BOX.
3. BUNA-N GASKETS THROUGHOUT.
4. STAINLESS STEEL SHAFT, HARDWARE & NAMEPLATE.

DASH NO.	"C"	"AD"
700	15.43[391.92]	4.57[116.07]
750	15.93[404.62]	5.07[128.77]
800	16.43[417.32]	5.57[141.47]

DRAWING REVISION A	REVISION BY	DATE
ECO ECO-0140840	APPROVED BY	DATE
ECO DESCRIPTION OUTLINE CONVERSION PROJECT		

COPYRIGHT REGAL BELOIT AMERICA, INC. ALL RIGHTS RESERVED.
PROPRIETARY AND CONFIDENTIAL INFORMATION - THIS DOCUMENT IS THE PROPERTY OF REGAL BELOIT AMERICA, INC. ("OWNER") AND CONTAINS OWNER'S PROPRIETARY INFORMATION. ANY PERSON, CORPORATION OR OTHER FIRM RECEIVING IT IS DEEMED, BY RECEIVING IT, TO AGREE THAT IT, AND/OR ANY PART OF IT, SHALL NOT BE DISCLOSED TO ANY PERSON, CORPORATION OR OTHER ENTITY, DUPLICATED, AND/OR USED, EXCEPT AS EXPRESSLY APPROVED IN WRITING IN ADVANCE BY OWNER. THIS DOCUMENT SHALL BE RETURNED TO OWNER UPON REQUEST. IT MAY BE SUBJECT TO CERTAIN RESTRICTIONS UNDER APPLICABLE EXPORT CONTROL LAWS AND REGULATIONS.

TOLERANCES UNLESS OTHERWISE SPECIFIED:

DEC.	INCH	mm	ANGLE
.X	±0.1	[±2.5]	±0.5°
.XX	±0.03	[±0.76]	
.XXX	±0.005	[±0.127]	
.XXXX	±0.0005	[±0.0127]	

REMOVE BURRS & BREAK SHARP EDGES: .003/.015 [.076/.381] X 45°
CORNER FILLETS: R.02 [.51]
MACHINED SURFACES: 125 INCH / 3.2 mm
mm SHOWN IN [BRACKETS]

DRAWN BY	A. KEETHA
DATE	01/18/2018
APPROVED BY	PK
DATE	03/08/2018
REFERENCE	607-0013
THIRD ANGLE PROJECTION	

Regal Beloit America, Inc.

DESCRIPTION: OUTLINE
140JM FRAME TEFC-RIGID "C"

MATERIAL | PROCESS/FINISH

SIZE C | DRAWING NUMBER 607-0333 | SHEET 1 OF1