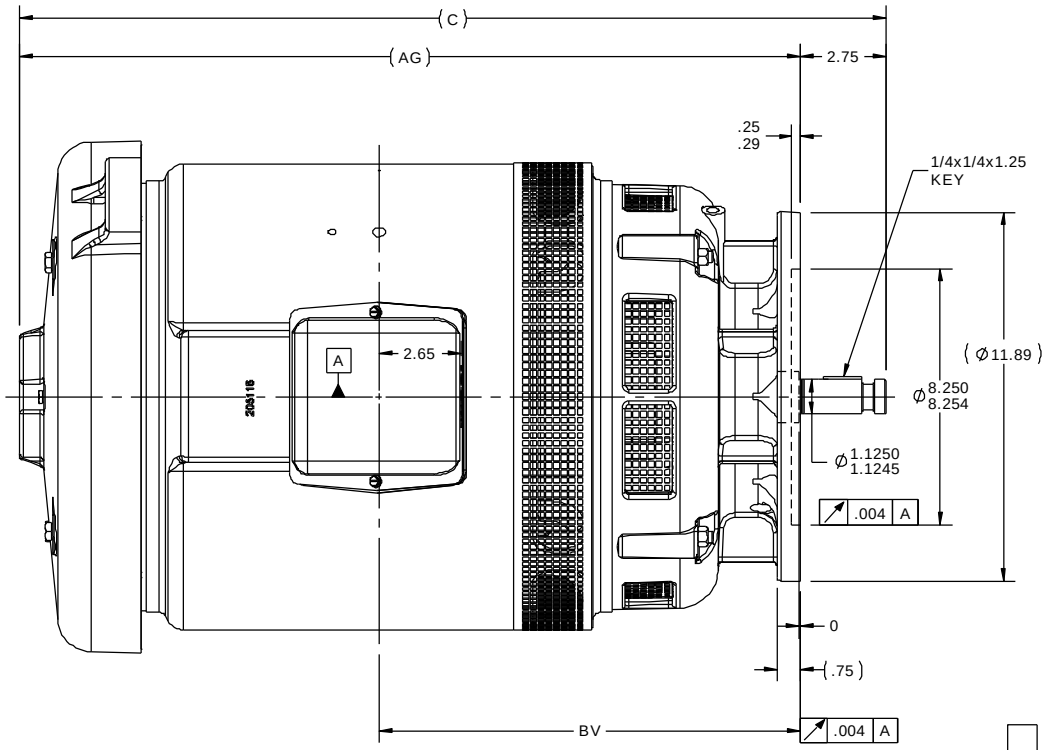

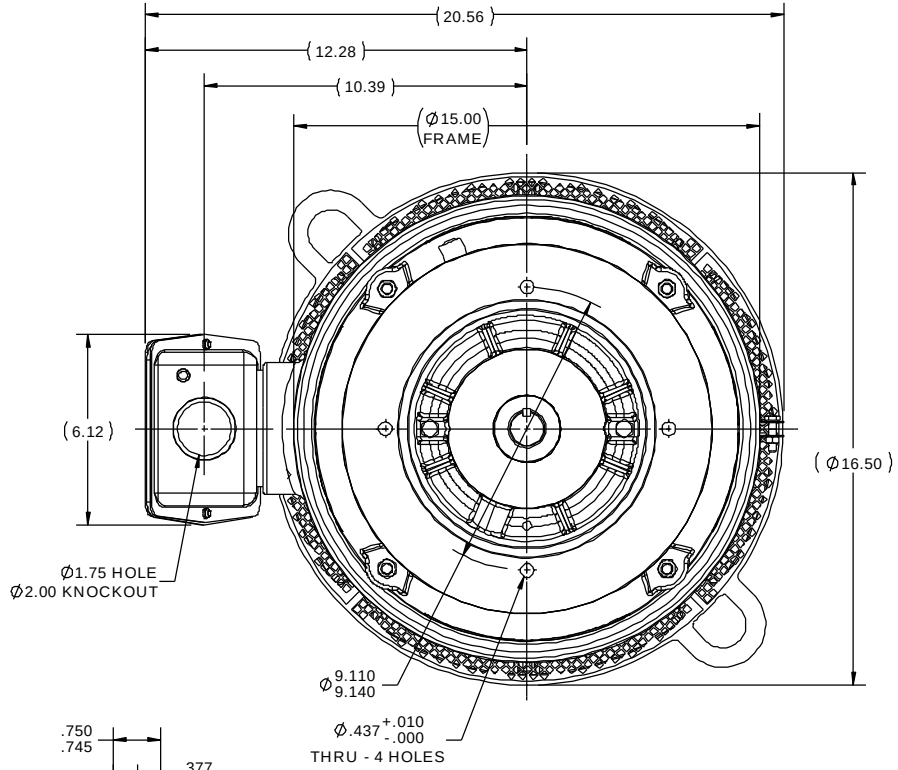

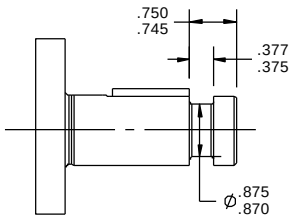

SHAFT DETAIL
SCALE: 2X

NOTES:
1. CONDUIT BOX CAN BE ROTATED IN 90° STEPS.
2. NAMEPLATE READ FROM SHAFT EXTENSION SIDE OF MOTOR.

DASH	FRAME	C	AG	BV
1500	250HPV	27.87	25.12	13.56

DRAWING REVISION	REVISION BY	DATE
ECO	APPROVED BY	DATE
ECO DESCRIPTION		

COPYRIGHT REGAL BELOIT AMERICA, INC. ALL RIGHTS RESERVED.
PROPRIETARY AND CONFIDENTIAL INFORMATION - THIS DOCUMENT IS THE PROPERTY OF REGAL BELOIT AMERICA, INC. ("OWNER") AND CONTAINS OWNER'S PROPRIETARY INFORMATION. ANY PERSON, CORPORATION OR OTHER FIRM RECEIVING IT IS DEEMED, BY RECEIVING IT, TO AGREE THAT IT, AND/OR ANY PART OF IT, SHALL NOT BE DISCLOSED TO ANY PERSON, CORPORATION OR OTHER ENTITY, DUPLICATED, AND/OR USED, EXCEPT AS EXPRESSLY APPROVED IN WRITING IN ADVANCE BY OWNER. THIS DOCUMENT SHALL BE RETURNED TO OWNER UPON REQUEST. IT MAY BE SUBJECT TO CERTAIN RESTRICTIONS UNDER APPLICABLE EXPORT CONTROL LAWS AND REGULATIONS.

TOLERANCES UNLESS OTHERWISE SPECIFIED:

DEC.	INCH	mm	ANGLE
.X	±0.1	[±2.5]	±7' 30"
.XX	±0.03	[±0.76]	
.XXX	±0.005	[±0.127]	
.XXXX	±0.0005	[±0.0127]	

REMOVE BURRS & BREAK SHARP EDGES: .003/.015 [.076/.381]
CORNER FILLETS: .02 [.51]
MACHINED SURFACES: 200 INCH / 5.1 mm
mm SHOWN IN [BRACKETS]

DRAWN BY	MSG
DATE	11-07-2013
APPROVED BY	TB
DATE	11-11-2013
PROCESS/FINISH	MU115611
THIRD ANGLE PROJECTION	

Regal Beloit America, Inc.

DESCRIPTION
OUTLINE
250HPV FR. - DR. PR. - P' BASE

MATERIAL

SIZE	DRAWING NUMBER	SHEET
B	SS208373	1 OF 1

11/11/2013 12:46:56 PM - Converted by Connexus