100103

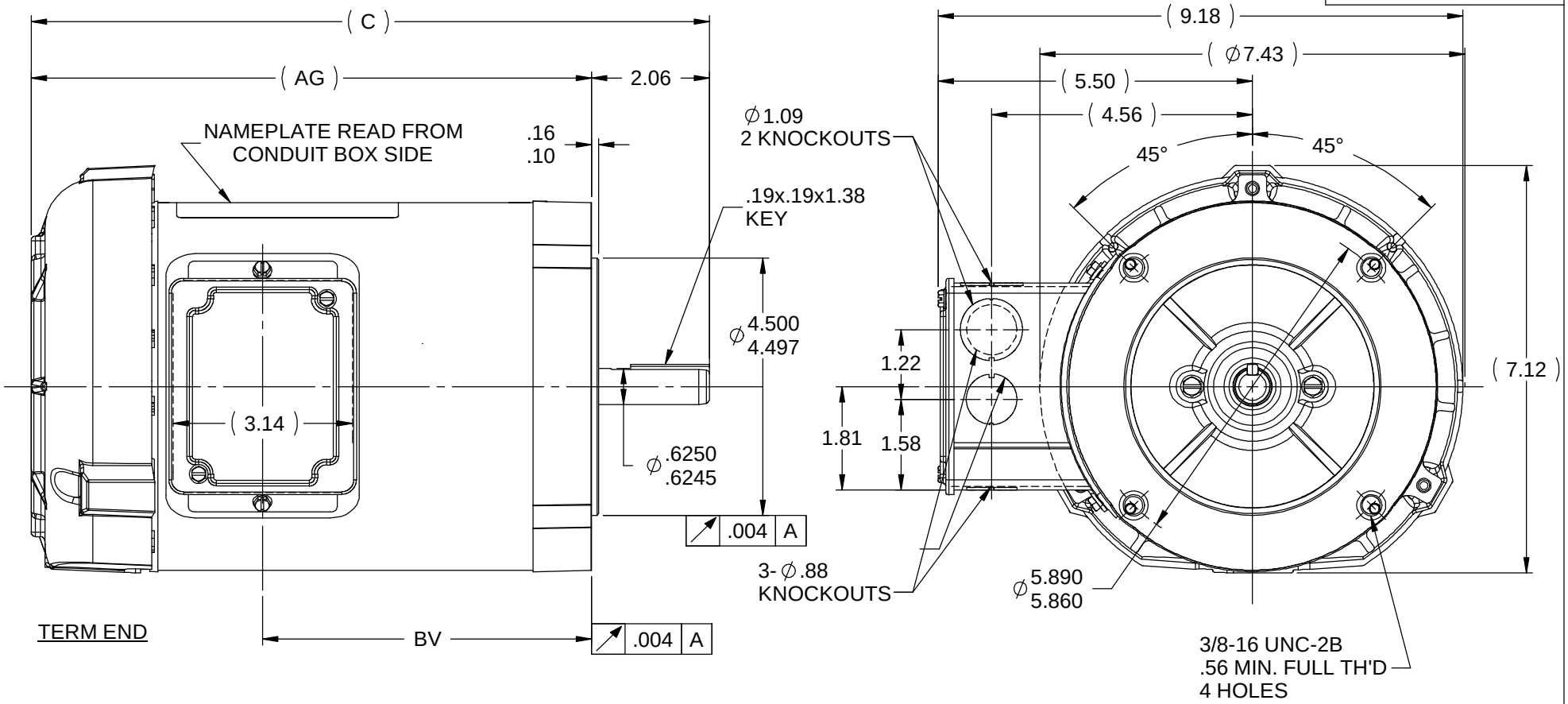

DASH	FRAME	C	AG	BV	DASH	FRAME	C	AG	BV
606	56-60	11.32	9.25	5.31	806	56-60	13.32	11.25	7.31
656	" -65	11.82	9.75	5.81	856	" -65	13.82	11.75	7.81
706	" -70	12.32	10.25	6.31	906	" -70	14.32	12.25	8.31
756	" -75	12.82	10.75	6.81	956	" -75	14.82	12.75	8.81

NOTE:
CONDUIT BOX CAN BE ROTATED 180°

NO	REVISION	BY & DATE	CHK
5	REDRAWN IN SOIDWORKS	TAT 06-02-2005	ML
4	REDRAWN IN AUTOCAD	TAT 06-29-2004	ML
3	REDRAWN ON CADD	GK 02-10-1988	

TOLERANCES UNLESS SPECIFIED

DEC	INCHES
.X	±.1
.XX	±.03
.XXX	±.005
.XXXX	±.0005
ANG	±7'30"

MARATHON ELECTRIC

TITLE OUTLINE
56 FR. - TEFC - C' FACE

MAT'L
FINISH
RFP
CAD FILE 100103_XX

DRAWN	GK 02-10-1988
CHK	TH 04-20-1993
APPR	MJ 04-20-1993
SCALE	3:8
REF	
FMF	
PREV	

SIZE	DRAWING NO	REV
A	100103	5

THIS DRAWING IN DESIGN AND DETAIL IS OUR PROPERTY AND MUST NOT BE USED EXCEPT IN CONNECTION WITH OUR WORK. ALL RIGHTS OF DESIGN AND INVENTION ARE RESERVED.

10/11/2012 3:19:23 PM - Converted by Convexus
You created this PDF from an application that is not licensed to print to novaPDF printer (http://www.novapdf.com)