SHEET 1 | REV 3 | 52A109647 | DRAWING NO. | SIZE A

THIRD ANGLE PROJECTION

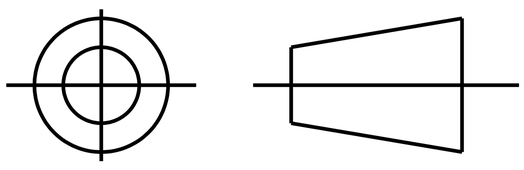

REVISIONS

REV.	DESCRIPTION	DATE	APPROVED
1	ADDED PARTS #2 & #3.	07/28/94	M.D.PAPE
2	CHG TO RBC FORMAT PER IS05-1777	03/22/06	SUDHA
3	"SLINGER" ADDED AS PER IS11-5514	12/01/2012	KOTI

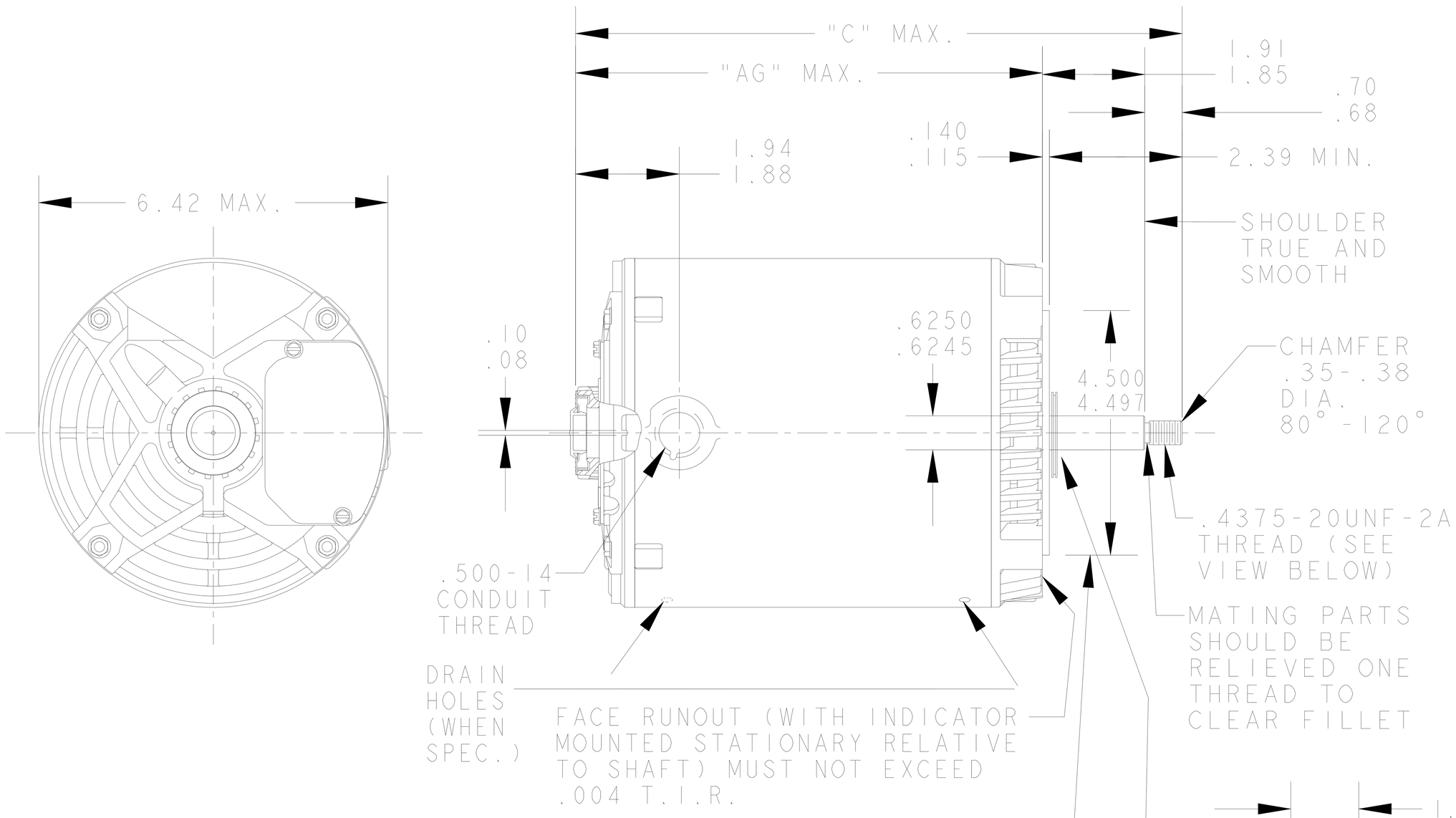

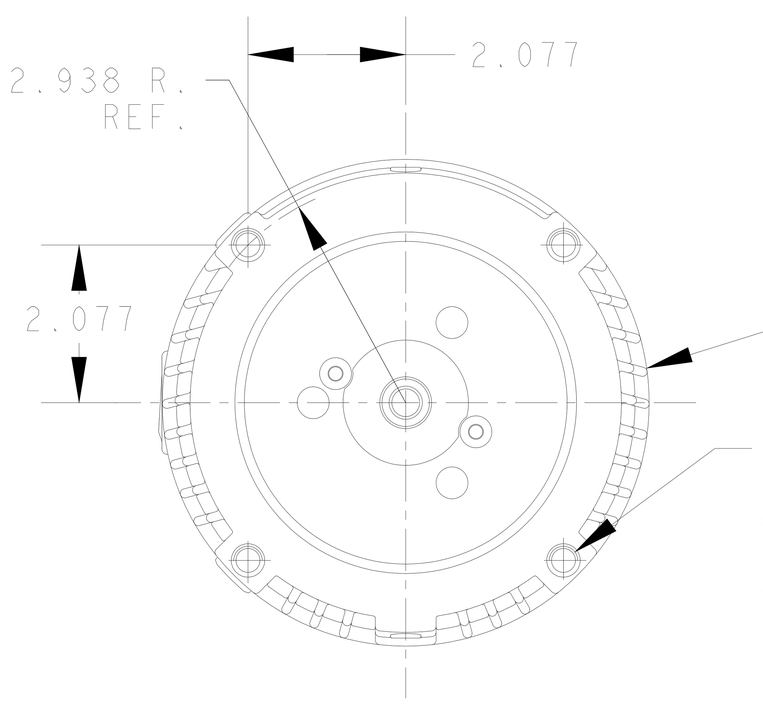

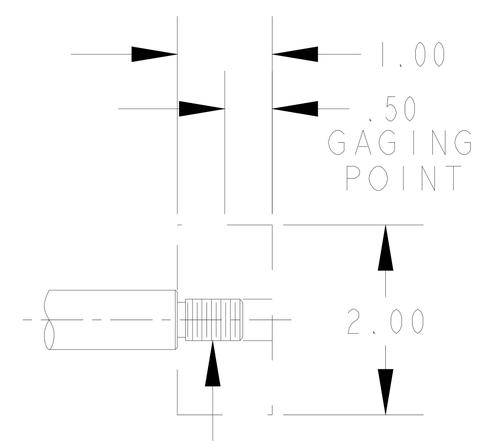

ECCENTRICITY OF THRD. PORTION OF SHAFT IS HELD WITHIN .004 TOTAL GAGE READING WITH THE INDICATOR ON THE O.D. OF THE GROUND RING GAGE AS SHOWN. THE GAGE BEING STATIONARY WITH RESPECT TO THE ROTOR.

ALL DIMENSIONS ARE IN INCHES

P	TYPE	GE SIZE	NEMA FR.	"C"	"AG"		MIN. SHELL
3	K	48	56J	13.12	10.49		8.43
2	K	49	56J	11.84	9.21		7.15
1	K	46	56J	11.24	8.61		6.55

SIGNATURES		DATE
MODEL	M.D.PAPE	07/13/94
DETAIL	.	.
CHECKED	.	.
ENGRG	.	.
MFG	.	.
QUALITY	.	.
ISSUED	M.D.PAPE	07/13/94

FOR ADDITIONAL INFO REFER TO:
APPLIED PRACTICES .
DIMENSIONS ARE IN INCHES ✓
MATERIAL .

SOLID MODEL: 52A109647

REGAL BELOIT

REGAL-BELOIT CORPORATION

TITLE

OUTLINE

JET PUMP MOTOR - DRIP PROOF - BALL BEARING R2 END MOUNTED FMF - 40 FRAME REDESIGN

SIZE A | DRAWING 52A109647 | REV 3

SCALE: 0.250 | REF. No: . | SHEET 1 OF 1