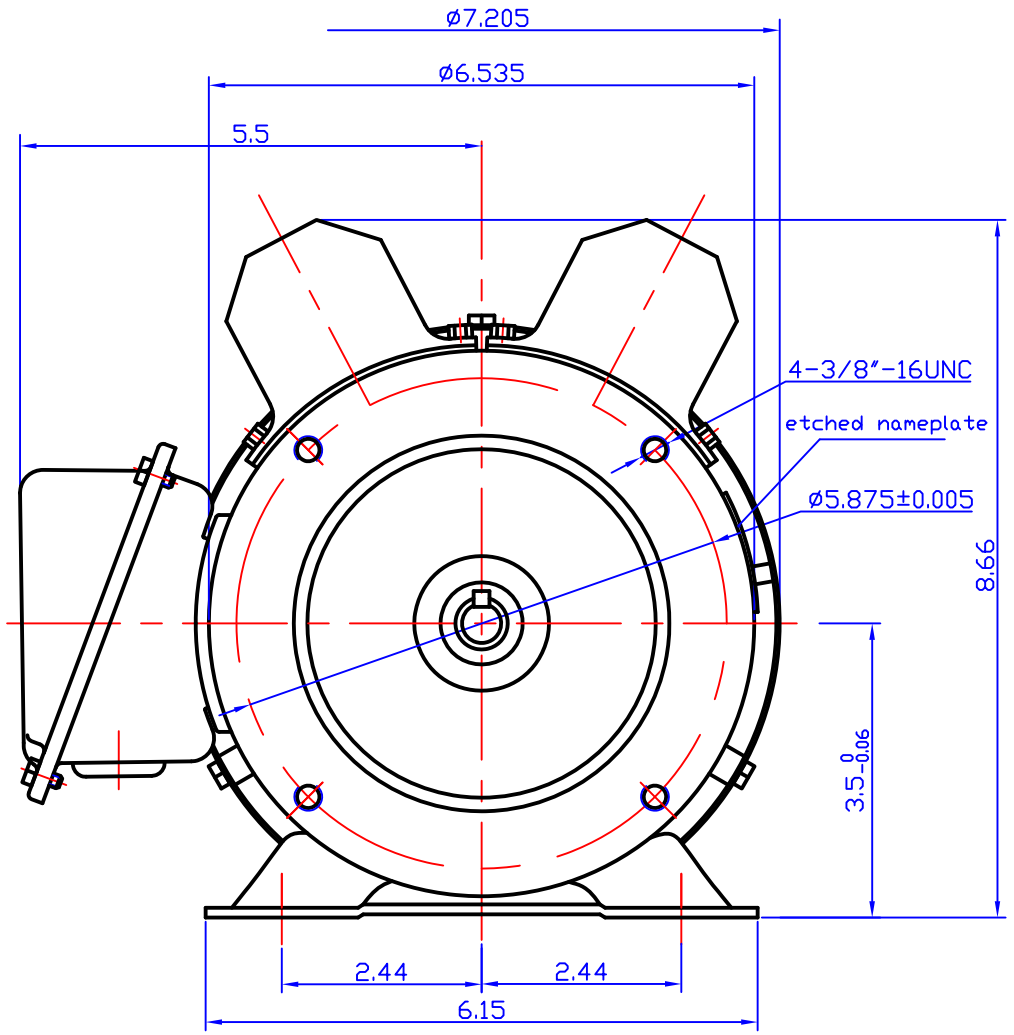

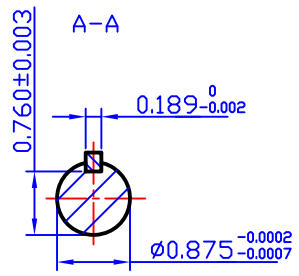

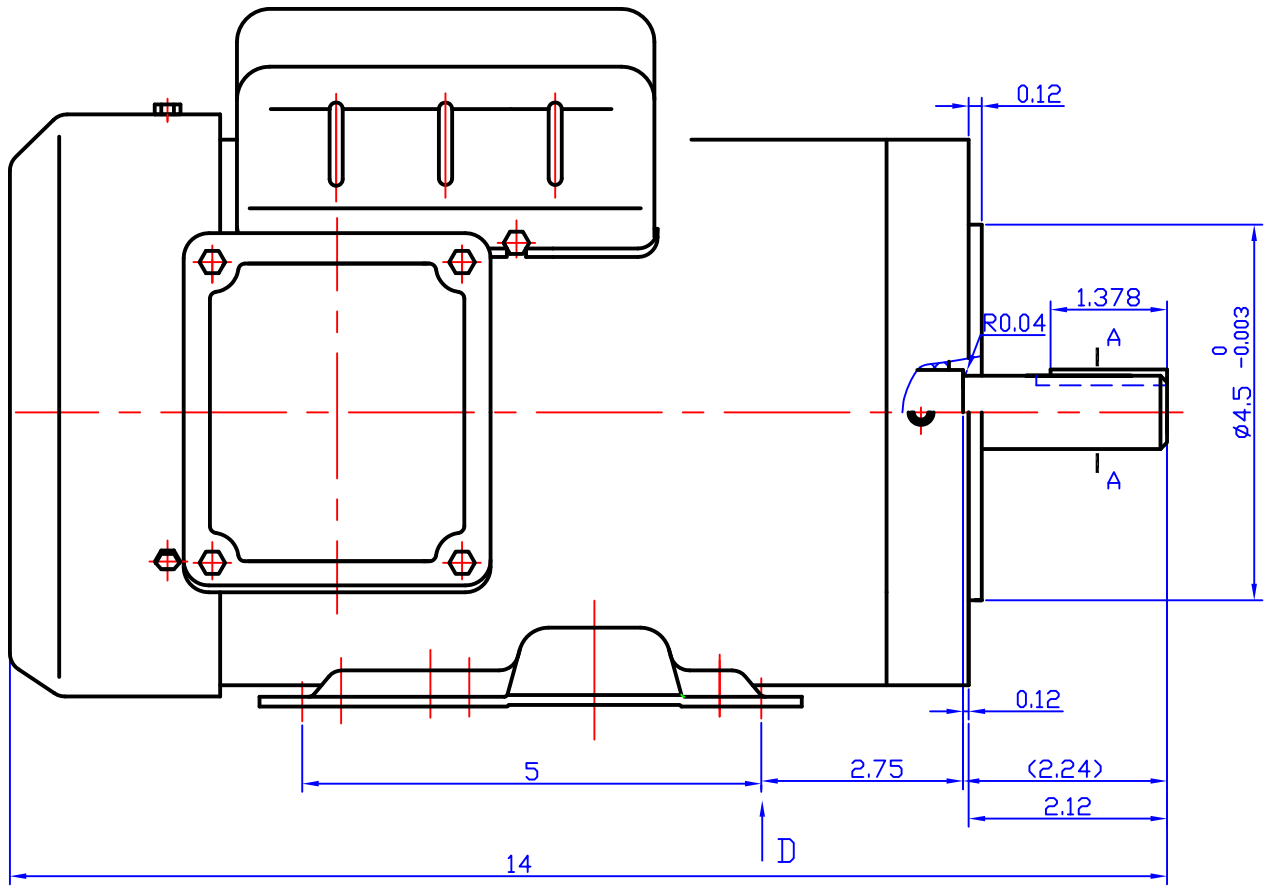

DIRECTION D

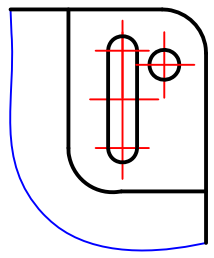

LSC NUMBER	CATA. NO.	HP	VOLT	Hz	POLE	FRAME	ENCLOSURE
N/A	191483.00	2	115/230	60	4P	145TC	TEFC

NO.	REVISION	BY & DATE	CH'K'D.

THIS DRAWING IN DESIGN AND DETAIL IS OUR PROPERTY AND MUST NOT BE USED EXCEPT IN CONNECTION WITH OUR WORK ALL RIGHTS OF DESIGN AND INVENTION ARE RESERVED
THIS IS AN ELECTRONICALLY GENERATED DOCUMENT - DO NOT SCALE THIS PRINT

TOLERANCES UNLESS OTHERWISE SPECIFIED		
DEC.	INCHES	METRIC
.X	±.1	±2.5
.XX	±.03	±.76
.XXX	±.005	±0.127
.XXXX	±.0005	±.0127
FRACTIONS	±1/64	
ANGLES	±1/2°	

191483 OUTLINE

DRAWN	TITLE
APPR.	
R.F.P.	MAT'L.
SCALE	
REF.	FINISH 2.06.2009
FMF	

REV. | DRAWING NO.