100097

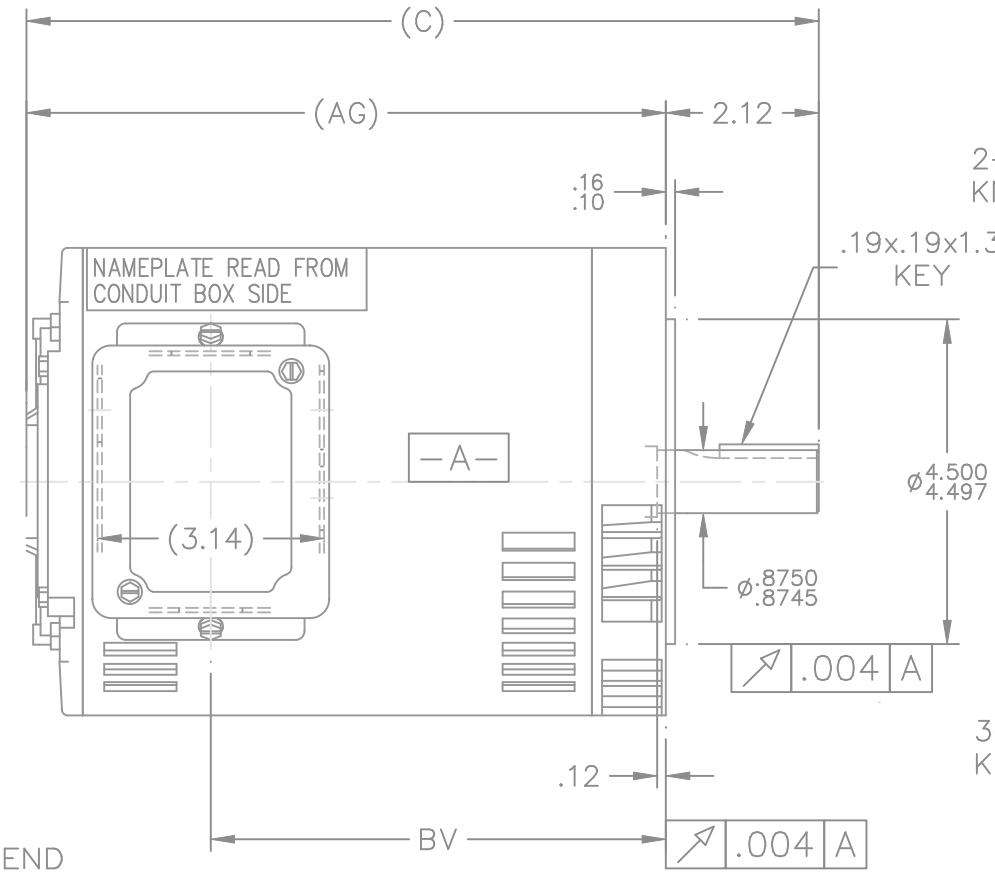

TERM. END

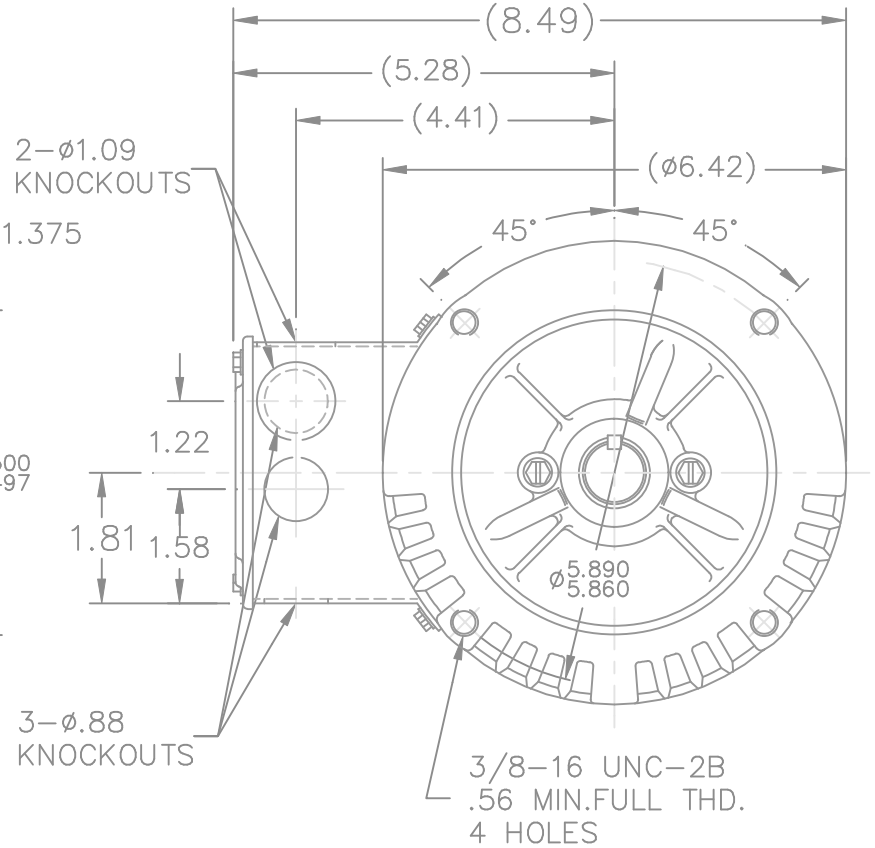

DASH	FR.	C	AG	BV	DASH	FR.	C	AG	BV
					806	140TC	11.99	9.87	7.31
656	140TC	10.49	8.37	5.81	856	140TC	12.49	10.37	7.81
706	140TC	10.99	8.87	6.31	906	140TC	12.99	10.87	8.31
756	140TC	11.49	9.37	6.81	956	140TC	13.49	11.37	8.81

NOTES:
1. CONDUIT BOX CAN BE ROTATED 180°

NO.	REVISION	BY & DATE	CHK
7	FRAME WAS 140TCZ CN 31509	TJB 03-30-2001	
6	ADDED SHAFT KEY NOTE: .19X.19X1.375 CN29200–1254	MSG 01-06-2001	
5	REVISED 'C' DIMENSION CN 29200–1189	MSG 12-11-2000	
4	REDRAWN ON CADD	SMC 04-24-1991	

TOLERANCES UNLESS SPECIFIED	
DEC.	INCHES
.X	±.1
.XX	±.03
.XXX	±.005
.XXXX	±.0005
ANG	±7'30"

MARATHON ELECTRIC

TITLE OUTLINE
140TC FR. DR.PR. – C'FACE

MAT'L.
FINISH

DRAWN	SMC	04-24-1991
CHK	ML	04-24-1991
APPD	GK	04-24-1991
SCALE	3=8	
REF		
FMF		
PREV		

RFP
DIST WP
CAD FILE 100097
SIZE A
DRAWING NO. 100097
PAGE OF
REV. 7

5/20/2009 7:08:56 AM