52A107280

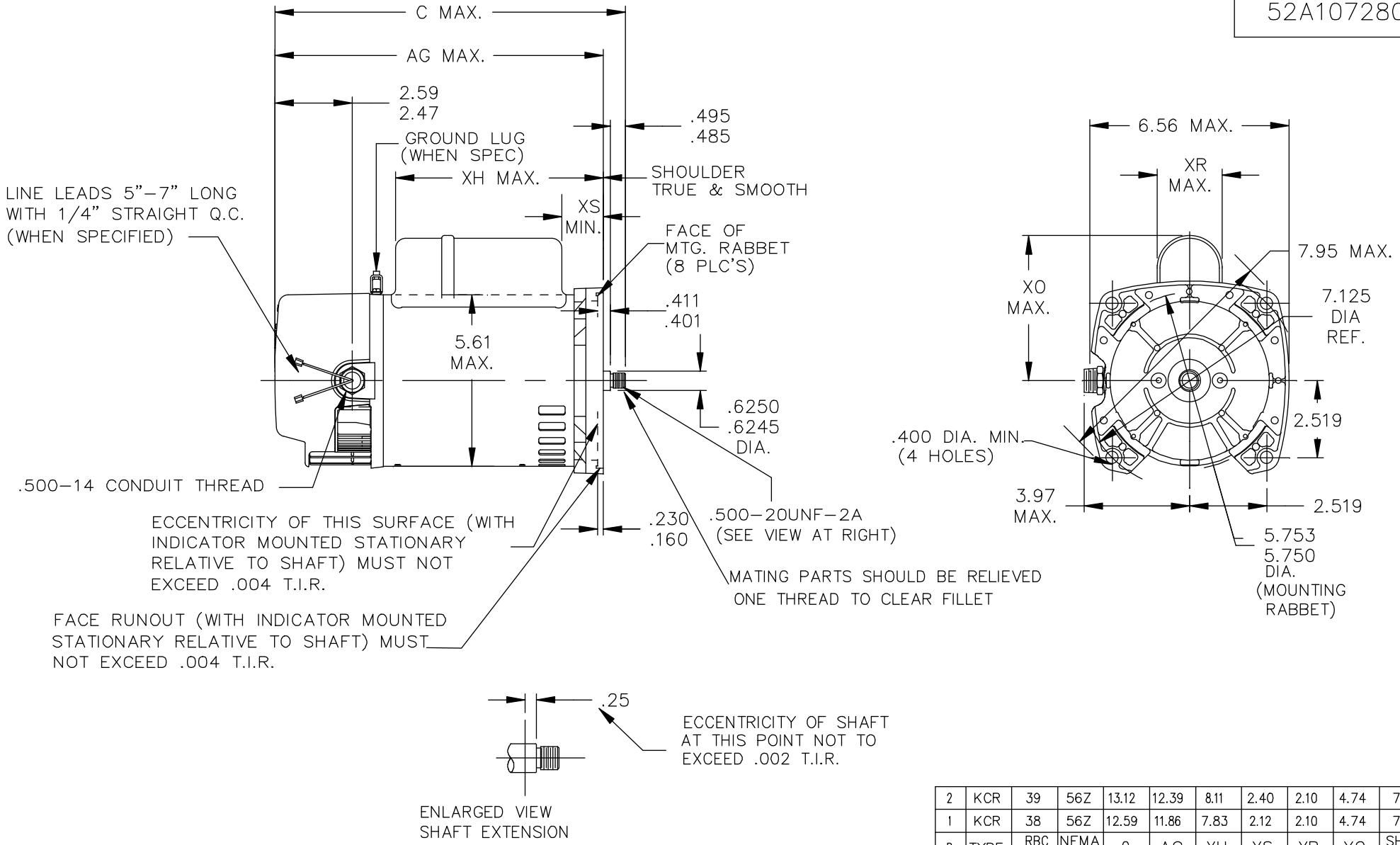

P	TYPE	RBC SIZE	NEMA FR	C	AG	XH	XS	XR	XO	SHELL REF.
2	KCR	39	56Z	13.12	12.39	8.11	2.40	2.10	4.74	7.75
1	KCR	38	56Z	12.59	11.86	7.83	2.12	2.10	4.74	7.22

NO.	REVISION	BY & DATE	CHK
5	JET/POOL IS REPLACED BY JET PUMP PER ECO–0033464	PVR 05/16/13	DS
4	ADDED DIM 7.95 MAX. PER IS06–1166	AB 09/14/06	
3	CHG TO RBC FORMAT PER IS05–1777	SUD 02/27/06	
2	REVISED PER TI95–21,753.	MDP 04/27/95	

TOLERANCES UNLESS SPECIFIED

DEC.	INCHES
.X	±.1
.XX	±.03
.XXX	±.005
.XXXX	±.0005
ANG	±1/2°

REGAL BELOIT — REGAL-BELOIT CORPORATION

TITLE: OUTLINE
2 COMPARTMENT UPGRADE – 56Z – JET PUMP

MAT'L.
FINISH
RFP
CAD FILE 52A107280
DIST

DRAWN MDP 03/31/93
CHK
APPD MDP 03/31/93
SCALE 3=8
REF
FMF
PREV

SIZE A | DRAWING NO. 52A107280 | REV. 5