Uncontrolled Copy

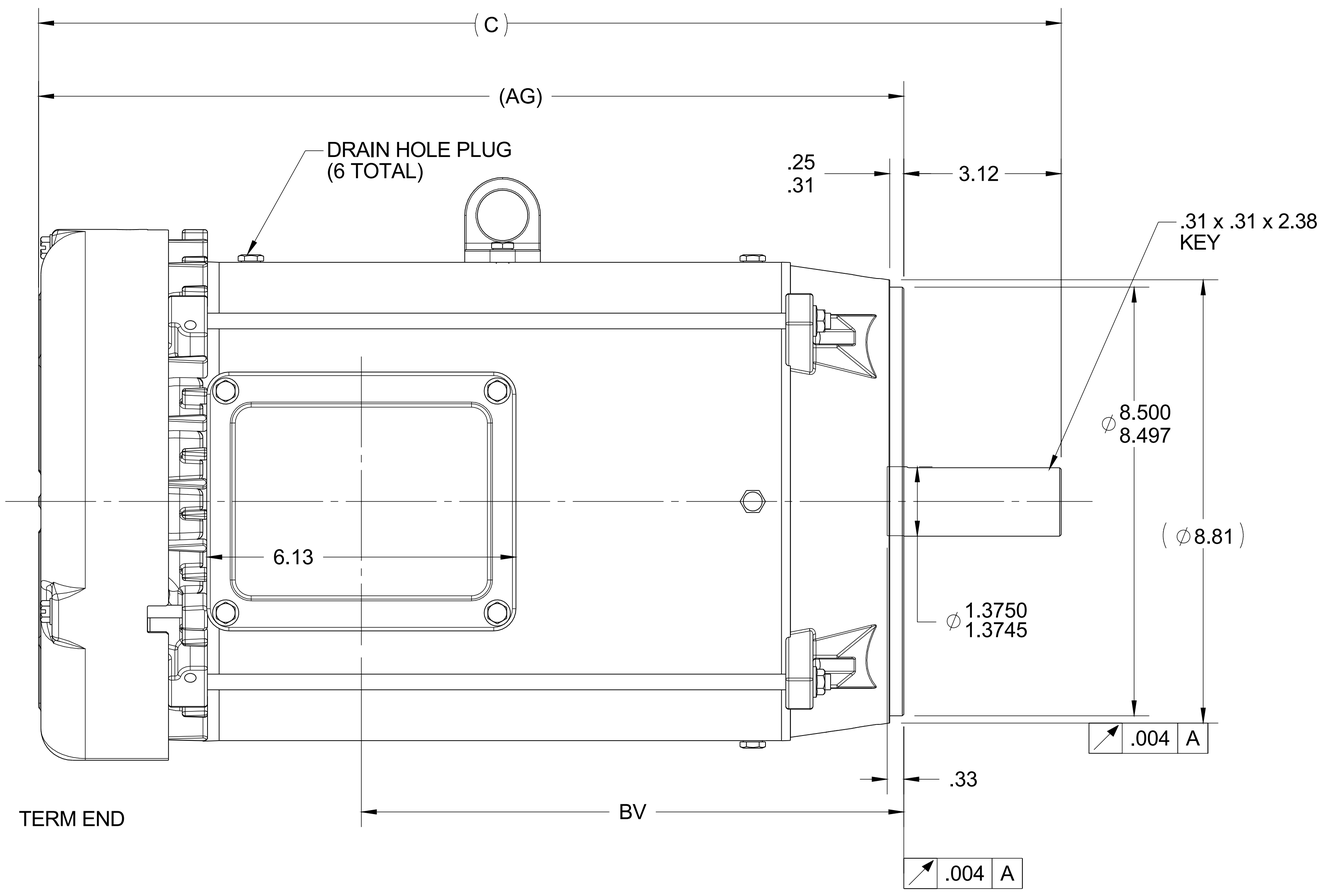


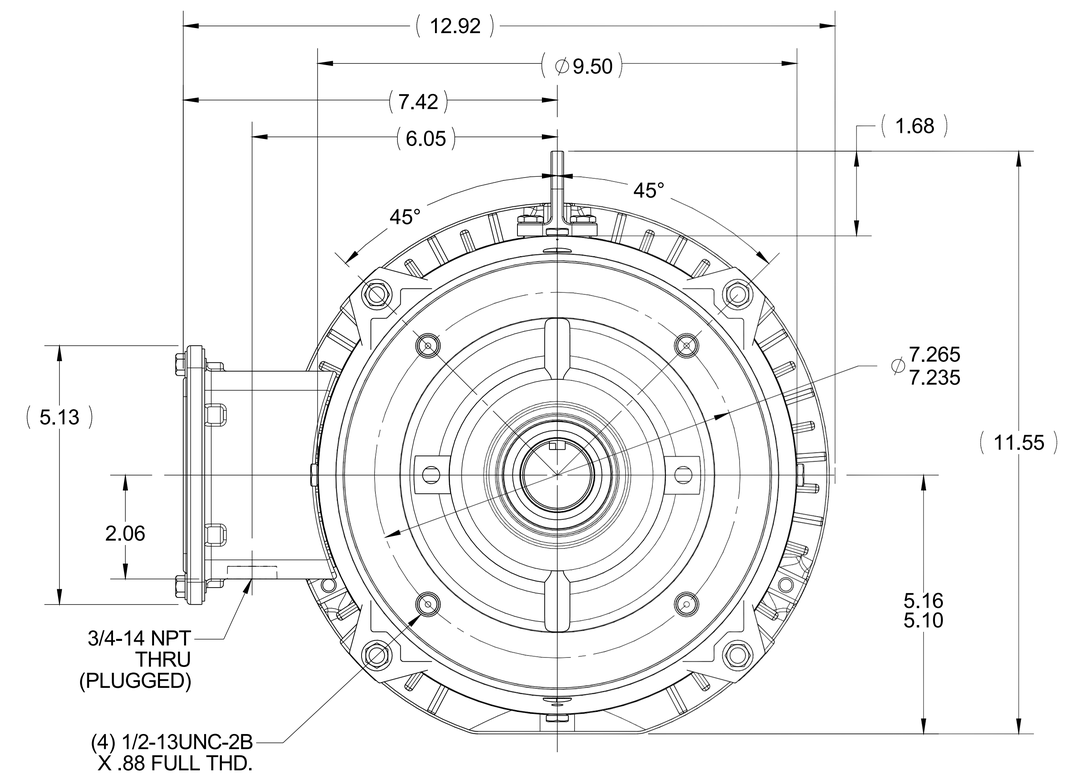


NOTES:
1- NAMEPLATE TO BE READ FROM C'BOX SIDE OF MOTOR.
DASH 965 TO BE READ FROM OPPOSITE SHAFT END
2- C'BOX CAN BE MOUNTED ON OPPOSITE SIDE BY REMOVING
BRACKETS AND TURNING FRAME 180 DEGREES (EXCEPT AS NOTED).

| DASH | FRAME | C | BV | AG | MOUNTING |
|---|---|---|---|---|---|
| 965 | 213T | 18.77 | 9.26 | 15.65 | |
| 1115 | 213/15T | 20.27 | 10.76 | 17.15 | |
| 1240 | 215T | 21.52 | 12.01 | 18.40 | F1 ONLY |

| DRAWING REVISION | REVISION BY | DATE |
|---|---|---|
| A | SL | 11/05/2015 |
| ECO: ECO-0086119 | APPROVED BY: SR | DATE: 11/05/2015 |
| ECO DESCRIPTION: NEW DRAWING | | |

COPYRIGHT REGAL BELOIT AMERICA, INC. ALL RIGHTS RESERVED.
PROPRIETARY AND CONFIDENTIAL INFORMATION - THIS DOCUMENT IS THE PROPERTY OF REGAL BELOIT AMERICA, INC. ("OWNER") AND CONTAINS OWNER'S PROPRIETARY INFORMATION. ANY PERSON, CORPORATION OR OTHER FIRM RECEIVING IT IS DEEMED, BY RECEIVING IT, TO AGREE THAT IT, AND/OR ANY PART OF IT, SHALL NOT BE DISCLOSED TO ANY PERSON, CORPORATION OR OTHER ENTITY, DUPLICATED, AND/OR USED, EXCEPT AS EXPRESSLY APPROVED IN WRITING IN ADVANCE BY OWNER. THIS DOCUMENT SHALL BE RETURNED TO OWNER UPON REQUEST. IT MAY BE SUBJECT TO CERTAIN RESTRICTIONS UNDER APPLICABLE EXPORT CONTROL LAWS AND REGULATIONS.

TOLERANCES UNLESS OTHERWISE SPECIFIED:

| DEC. | INCH | mm | ANGLE |
|---|---|---|---|
| .X | ±0.1 | [±2.5] | ±0.5° |
| .XX | ±0.03 | [±0.76] | |
| .XXX | ±0.005 | [±0.127] | |
| .XXXX | ±0.0005 | [±0.0127] | |

REMOVE BURRS & BREAK SHARP EDGES: .003/.015 [.076/.381] X 45°
CORNER FILLETS: R.02 [.51]
MACHINED SURFACES: 125 INCH / 3.2 mm
mm SHOWN IN [BRACKETS]

DRAWN BY: SL
DATE: 11/05/2015
APPROVED BY: SR
DATE: 11/05/2015
REFERENCE:
THIRD ANGLE PROJECTION

ORACLE REV: 001

Regal Beloit America, Inc.

DESCRIPTION: OUTLINE
WASHDOWN 210FR-TEFC-C-FACE-3PH-ROUND

MATERIAL:
PROCESS/FINISH:

SIZE: B
DRAWING NUMBER: 038049
SHEET: 1 OF 1