SS620684

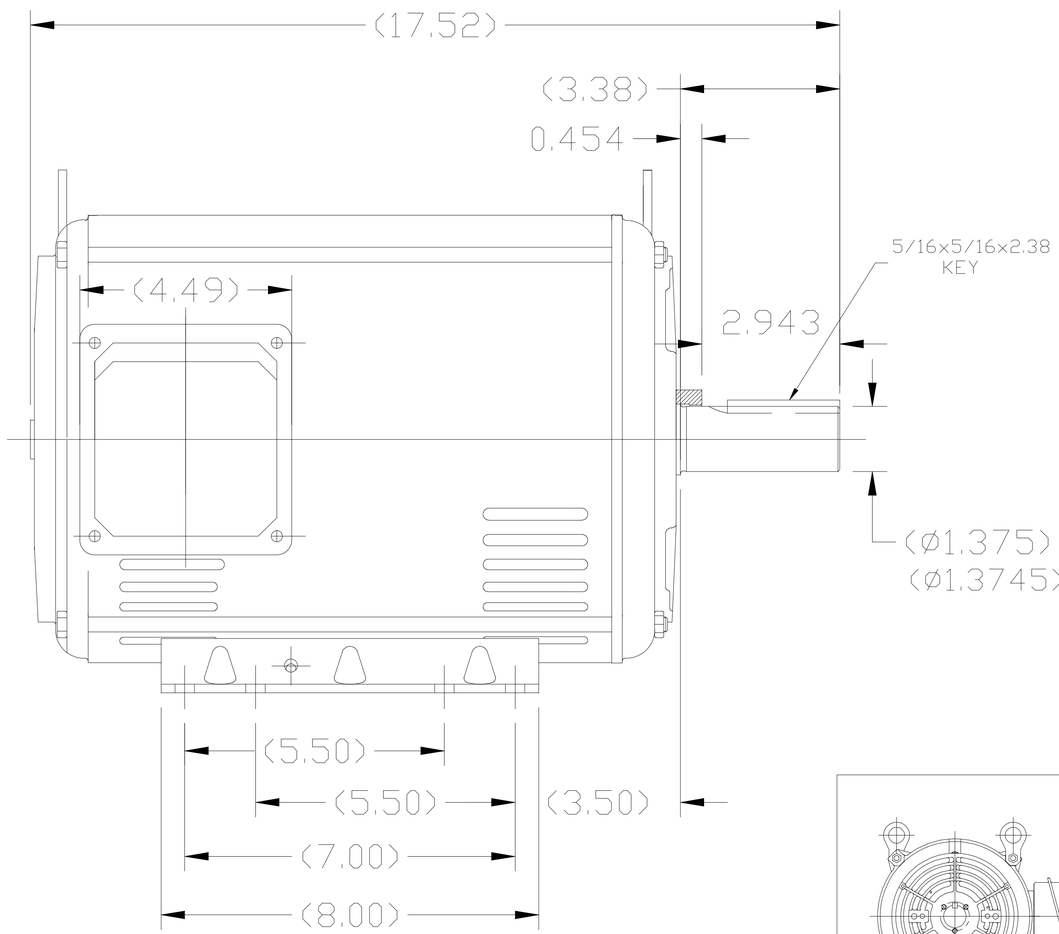

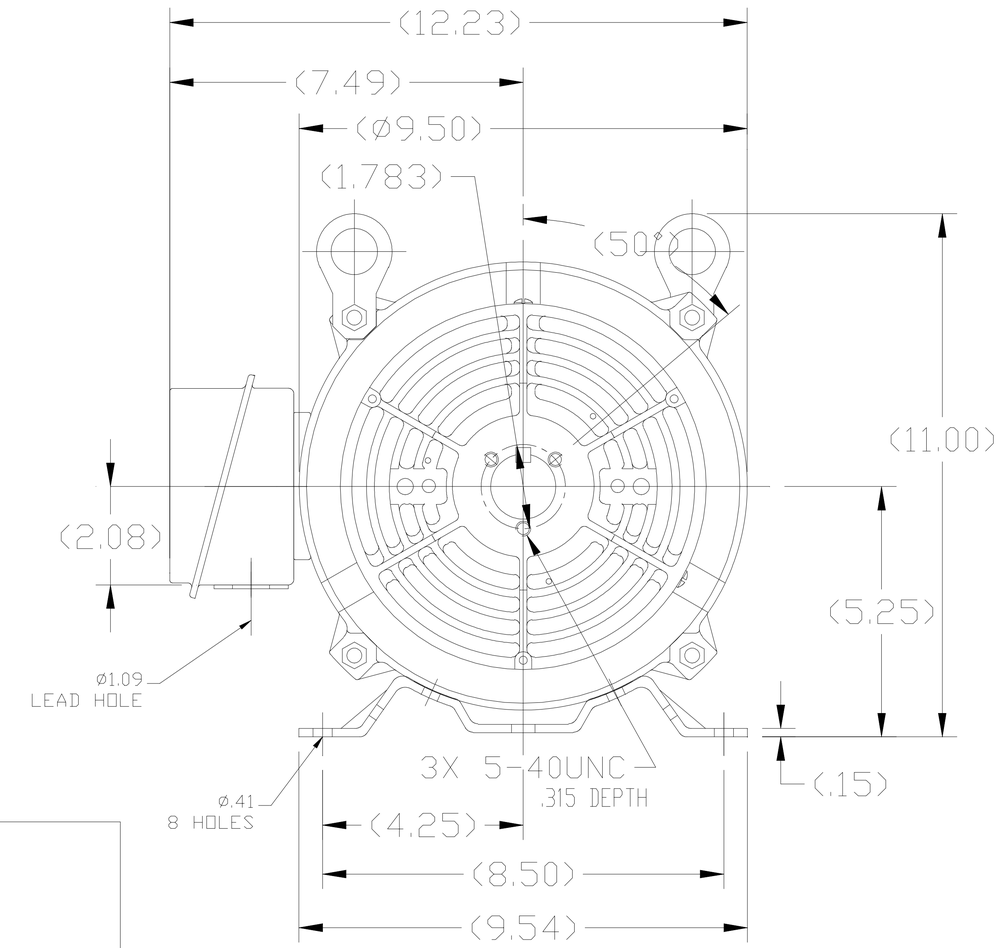

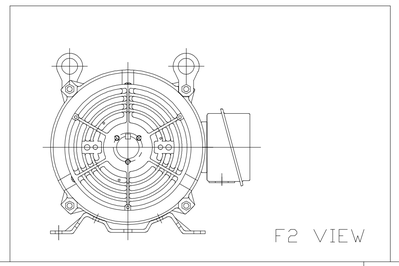

(MAY NOT BE DRAWN TO SCALE)

NO.	REVISION	BY & DATE
03	F2 VIEW ADDED PER ECO-0162175	NK 02-20-19

TOLERANCES UNLESS SPECIFIED		
	DEC.	INCHES
	.X	±.1
	.XX	±.03
	.XXX	±.005
VY	.XXXX	±.0005
CHK	ANG	±1/2°

REGAL — REGAL-BELOIT CORPORATION

TITLE: OUTLINE
213/215T ODP-ROLLED STEEL

MAT'L.

FINISH

DRAWN ZXW 04-16-2015
CHK ZL 04-16-2015
APPD ZYH 04-16-2015
SCALE
REF
FMF REGAL-WUXI
PREV

RFP
DIST

CAD FILE SS620684

SIZE B | DRAWING NO. SS620684 | REV. 3

SS620684

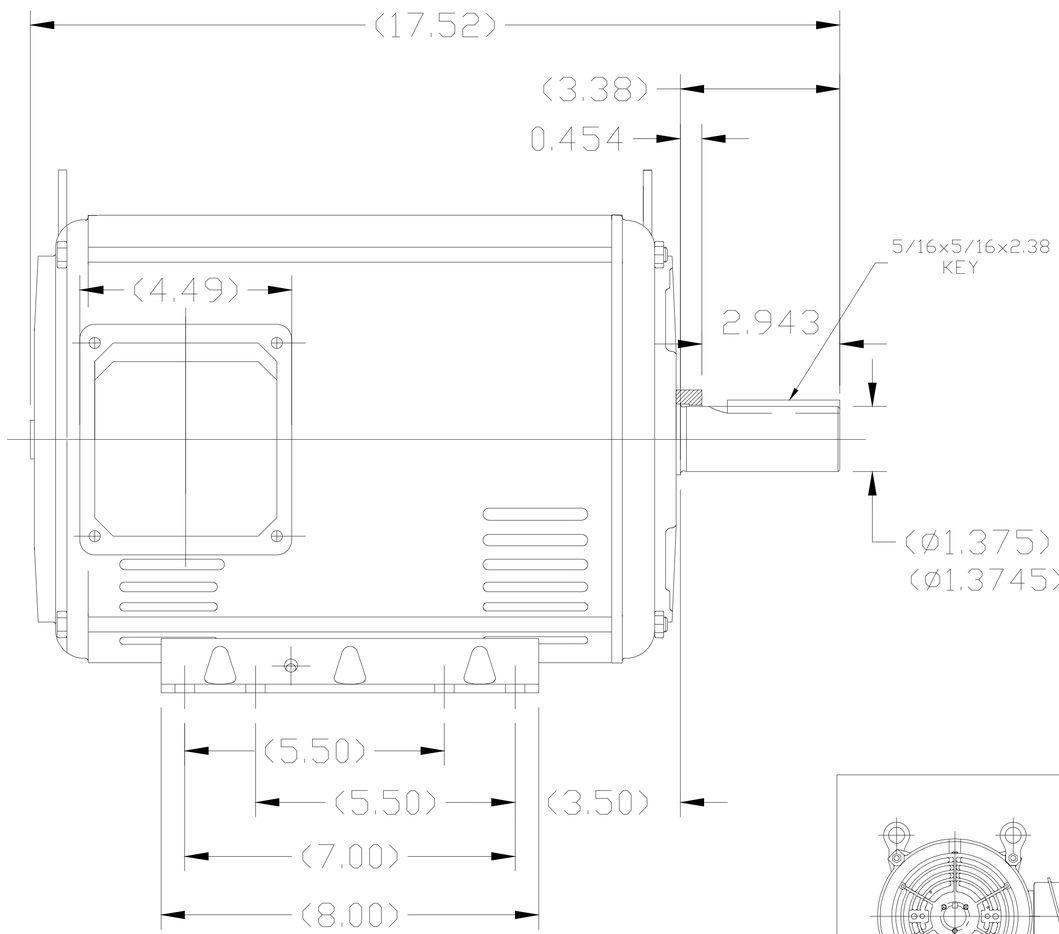

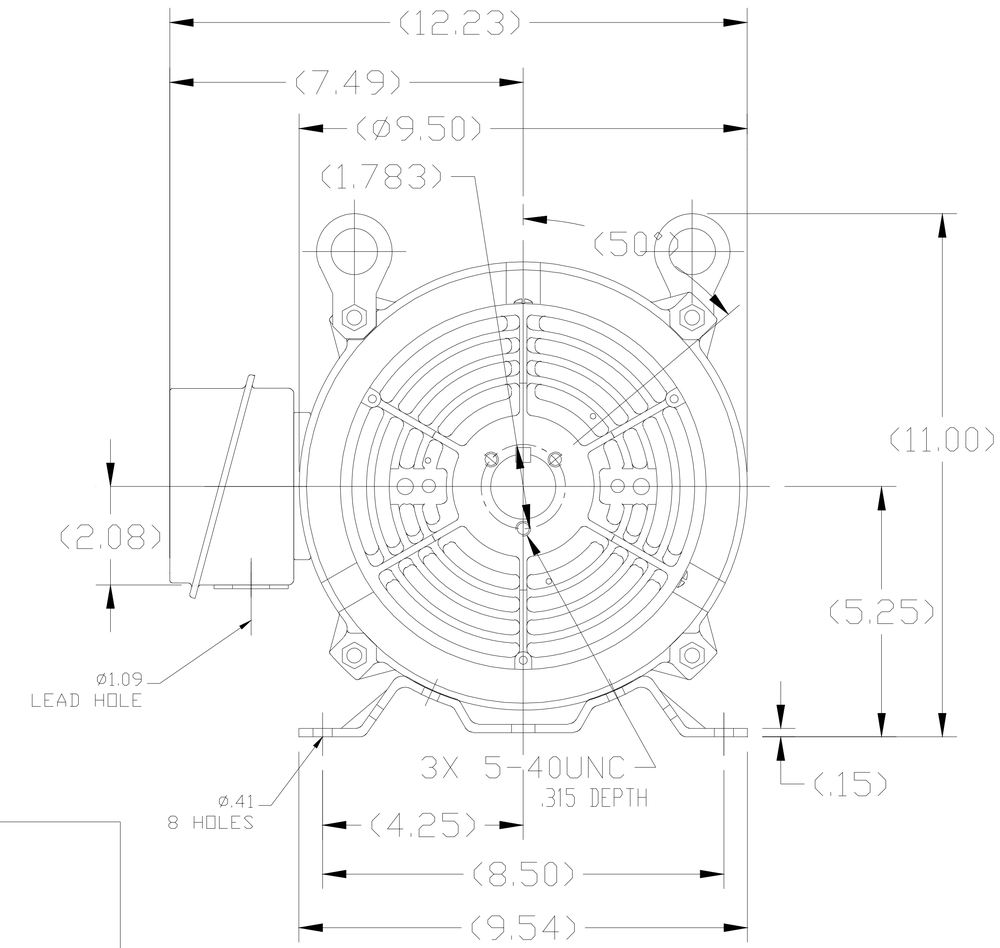

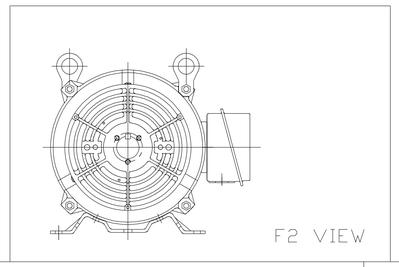

F2 VIEW

(MAY NOT BE DRAWN TO SCALE)

NO.	REVISION	BY & DATE
03	F2 VIEW ADDED PER ECO-0162175	NK 02-20-19

TOLERANCES UNLESS SPECIFIED	
DEC.	INCHES
.X	±.1
.XX	±.03
.XXX	±.005
.XXXX	±.0005
ANG	±1/2°

VY
CHK

REGAL — REGAL-BELOIT CORPORATION

TITLE: OUTLINE
213/215T ODP-ROLLED STEEL

MAT'L.
FINISH

DRAWN ZXW 04-16-2015
CHK ZL 04-16-2015
APPD ZYH 04-16-2015
SCALE
REF
FMF REGAL-WUXI
PREV

RFP
DIST

CAD FILE SS620684

SIZE	DRAWING NO.	REV.
B	SS620684	3