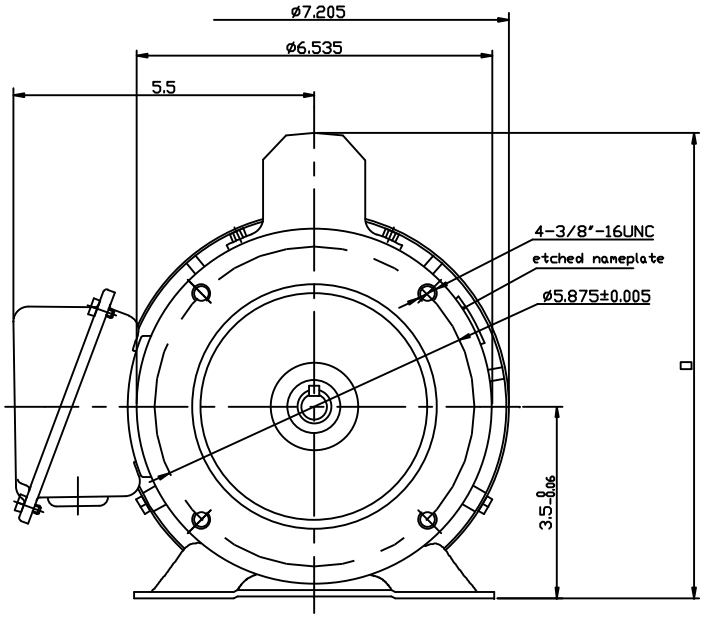

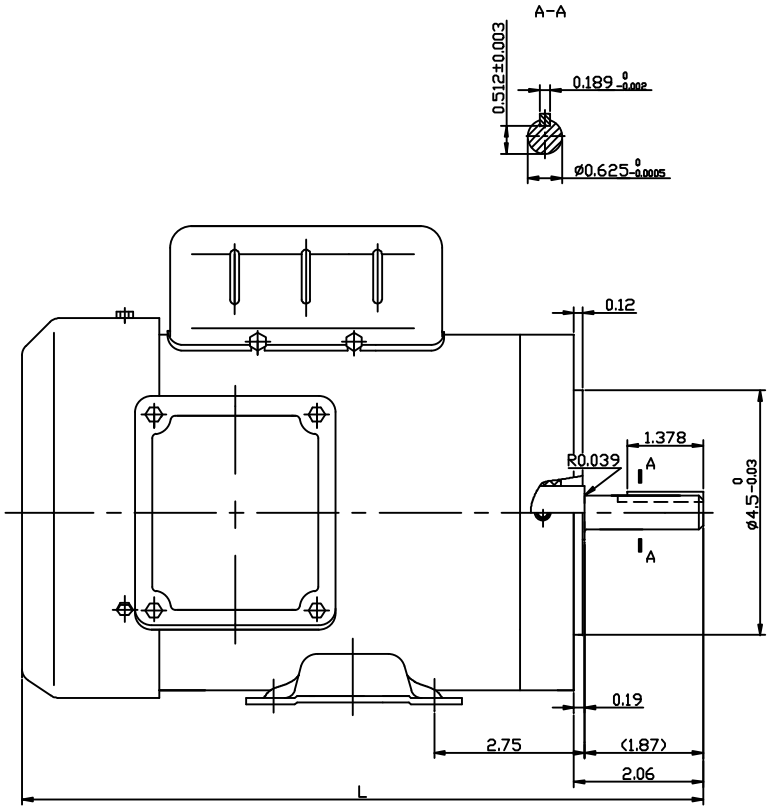

LSC NUMBER	CATA. NO.	HP	L	D	VOLT	Hz	POLE	FRAME	ENCLOSURE
N/A	191475.00	1/2	11.1	8.46	115/230	60	4P	56C	TEFC
	191477.00	3/4	11.73	8.86					
	191479.00	1	12.24	9.09					

D

DIRECTION D

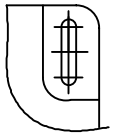

NO.	REVISION	BY & DATE	CH'K'D.

THIS DRAWING IN DESIGN AND DETAIL IS OUR PROPERTY AND MUST NOT BE USED EXCEPT IN CONNECTION WITH OUR WORK ALL RIGHTS OF DESIGN AND INVENTION ARE RESERVED
THIS IS AN ELECTRONICALLY GENERATED DOCUMENT - DO NOT SCALE THIS PRINT

TOLERANCES UNLESS OTHERWISE SPECIFIED		
DEC.	INCHES	METRIC
.X	±.1	±2.5
.XX	±.03	±.76
.XXX	±.005	±0.127
.XXXX	±.0005	±0.127
FRACTIONS	±1/64	
ANGLES	±1/2°	

191475,191477,191479 OUTLINE

DRAWN	TITLE		
APPR.			
R.F.P.	MAT'L.		
SCALE			
REF.	FINISH 10.09.2012	REV.	DRAWING NO.
FMF			