034992ME

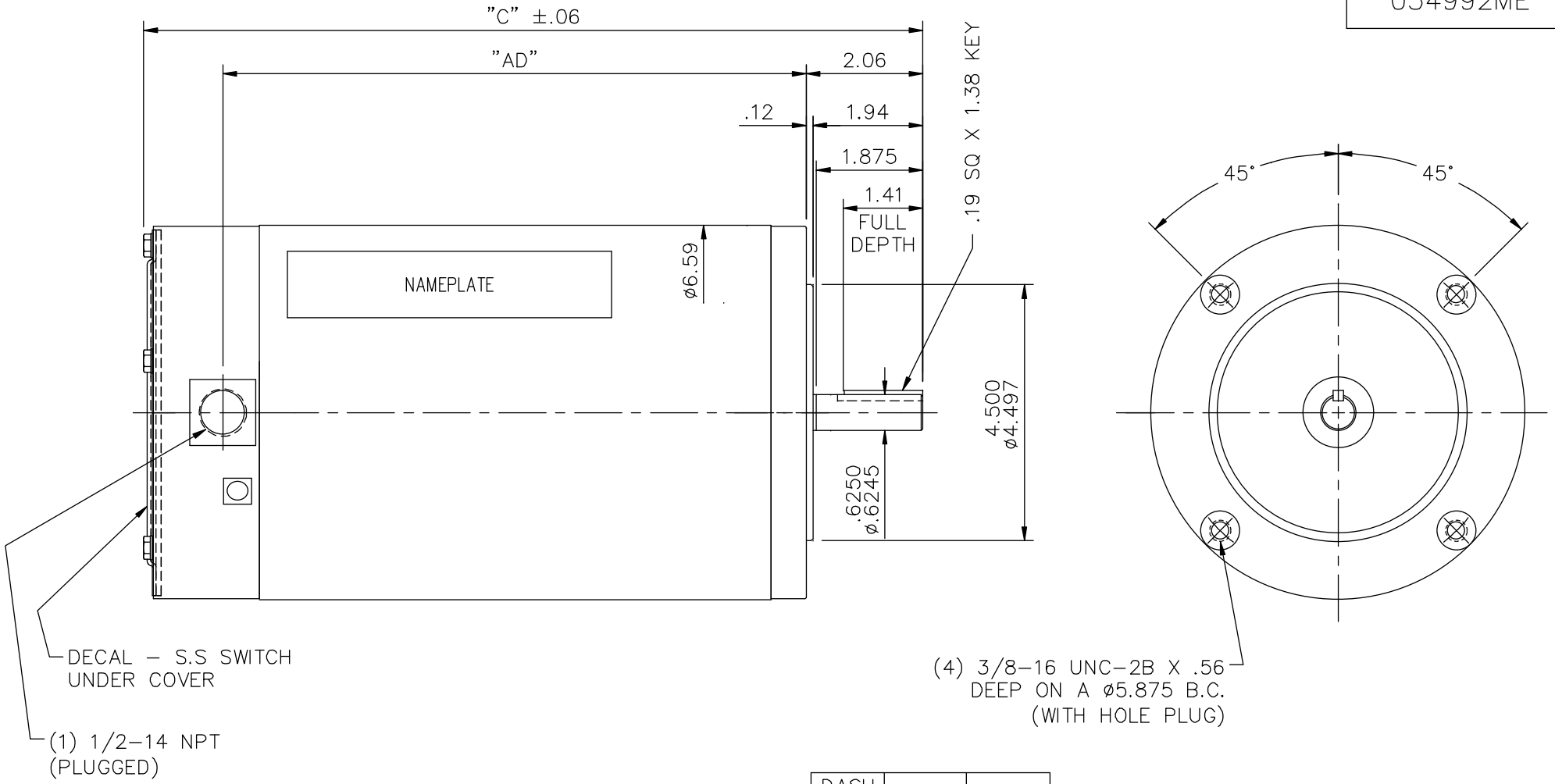

SPECIAL FEATURES:

VITON CONDUIT BOX & COVER GASKETS
VITON O–RINGS IN ENDBELL RABBETS
VITON SHAFT SEAL
BREATHER PLUGS IN L.E. ENDBELL (B.I.C.B.)
ALL STAINLESS STEEL CONSTRUCTION

DASH NO.	"C"	"AD"
700	11.70	8.25
750	12.20	8.75
800	12.70	9.25
850	13.20	9.75
900	13.70	10.25

MAXIMUM FACE RUNOUT TO BE .004 T.I.R.
MAXIMUM PILOT ECCENTRICITY .004 T.I.R.
PERMISSIBLE SHAFT RUNOUT .002 T.I.R.

NO.	REVISION	BY & DATE	CHK

TOLERANCES UNLESS SPECIFIED

DEC.	INCHES
.X	±.1
.XX	±.03
.XXX	±.005
.XXXX	±.0005
ANG	±1/2°

MARATHON ELECTRIC

TITLE: OUTLINE– 56C FRAME TENV– "C" FACE

MAT'L.: STAINLESS STEEL DUCK

FINISH

CAD FILE: 034992ME

RFP

DIST

DRAWN	PVR 10/07/13
CHK	GRB 10/07/13
APPD	
SCALE	3=8
REF	034992
FMF	056C17V5304
PREV	

SIZE: A | DRAWING NO.: 034992ME | REV.: