Uncontrolled Copy

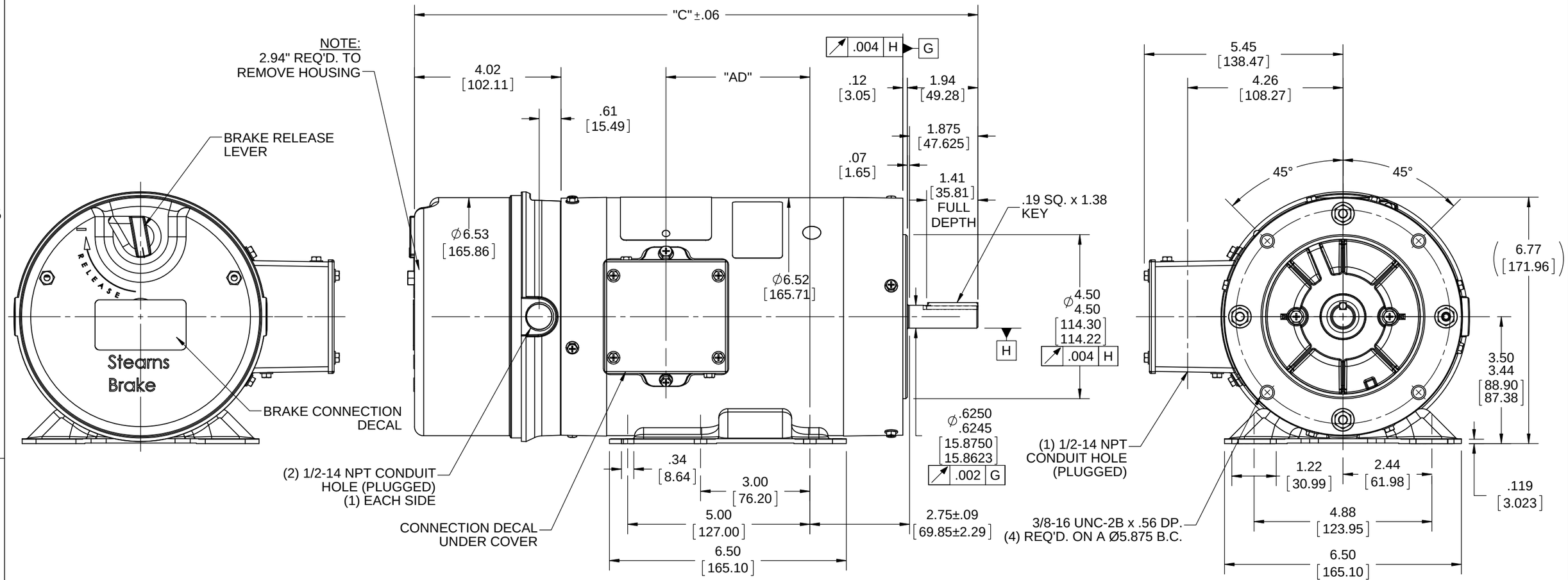

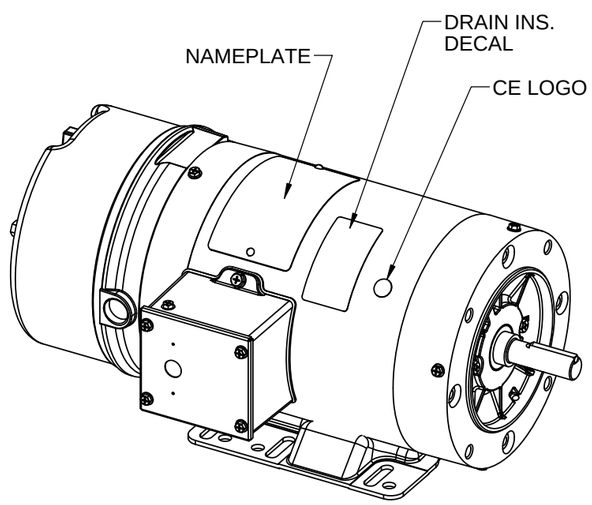

DASH NO.	"C"	"AD"
500	14.00	2.44
550	14.50	2.94
600	15.00	3.44
650	15.50	3.94
700	16.00	4.44
750	16.50	4.94
800	17.00	5.44

WASHGUARD FEATURES:
1) SHAFT SEAL & V-RING
2) PLUGGED DRAIN HOLES IN ENDBELLS & CONDUIT BOX
3) STAINLESS STEEL SHAFT, HARDWARE, & NAMEPLATE
4) GASKETS THROUGHOUT

DRAWING REVISION	REVISION BY	DATE
A	AS	01/16/2017
ECO: ECO-0116446	APPROVED BY: PK	DATE: 01/16/2017
ECO DESCRIPTION: NEW DRAWING		

COPYRIGHT REGAL BELOIT AMERICA, INC. ALL RIGHTS RESERVED.
PROPRIETARY AND CONFIDENTIAL INFORMATION - THIS DOCUMENT IS THE PROPERTY OF REGAL BELOIT AMERICA, INC. ("OWNER") AND CONTAINS OWNER'S PROPRIETARY INFORMATION. ANY PERSON, CORPORATION OR OTHER FIRM RECEIVING IT IS DEEMED, BY RECEIVING IT, TO AGREE THAT IT, AND/OR ANY PART OF IT, SHALL NOT BE DISCLOSED TO ANY PERSON, CORPORATION OR OTHER ENTITY, DUPLICATED, AND/OR USED, EXCEPT AS EXPRESSLY APPROVED IN WRITING IN ADVANCE BY OWNER. THIS DOCUMENT SHALL BE RETURNED TO OWNER UPON REQUEST. IT MAY BE SUBJECT TO CERTAIN RESTRICTIONS UNDER APPLICABLE EXPORT CONTROL LAWS AND REGULATIONS.

TOLERANCES UNLESS OTHERWISE SPECIFIED:

DEC.	INCH	mm	ANGLE
.X	±0.1	[±2.5]	±0.5°
.XX	±0.01	[±0.25]	
.XXX	±0.005	[±0.127]	
.XXXX	±0.0005	[±0.0127]	

REMOVE BURRS & BREAK SHARP EDGES: .003/.015 [.076/.381] X 45°
CORNER FILLETS: R.02 [.51]
MACHINED SURFACES: 125 INCH / 3.2 mm
mm SHOWN IN [BRACKETS]

DRAWN BY	AS
DATE	01/16/2017
APPROVED BY	PK
DATE	01/16/2017
REFERENCE	607-0147
THIRD ANGLE PROJECTION	

REGAL™ Regal Beloit America, Inc.

DESCRIPTION: OUTLINE
TENV - RIGID "C" FACE - BRAKEMOTOR

MATERIAL | PROCESS/FINISH

SIZE: B | DRAWING NUMBER: 607-0288 | SHEET: 1 OF 1