Uncontrolled Copy

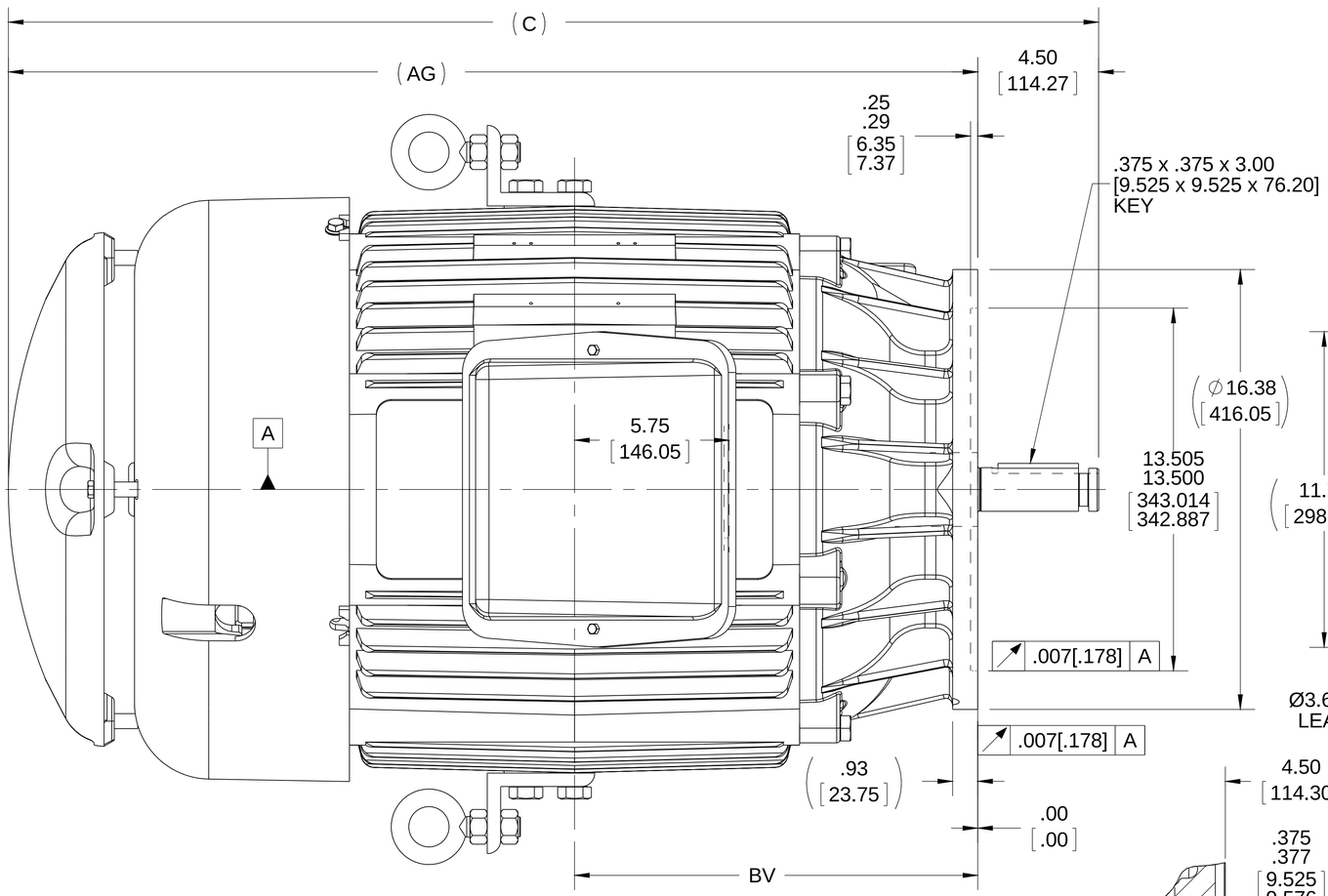

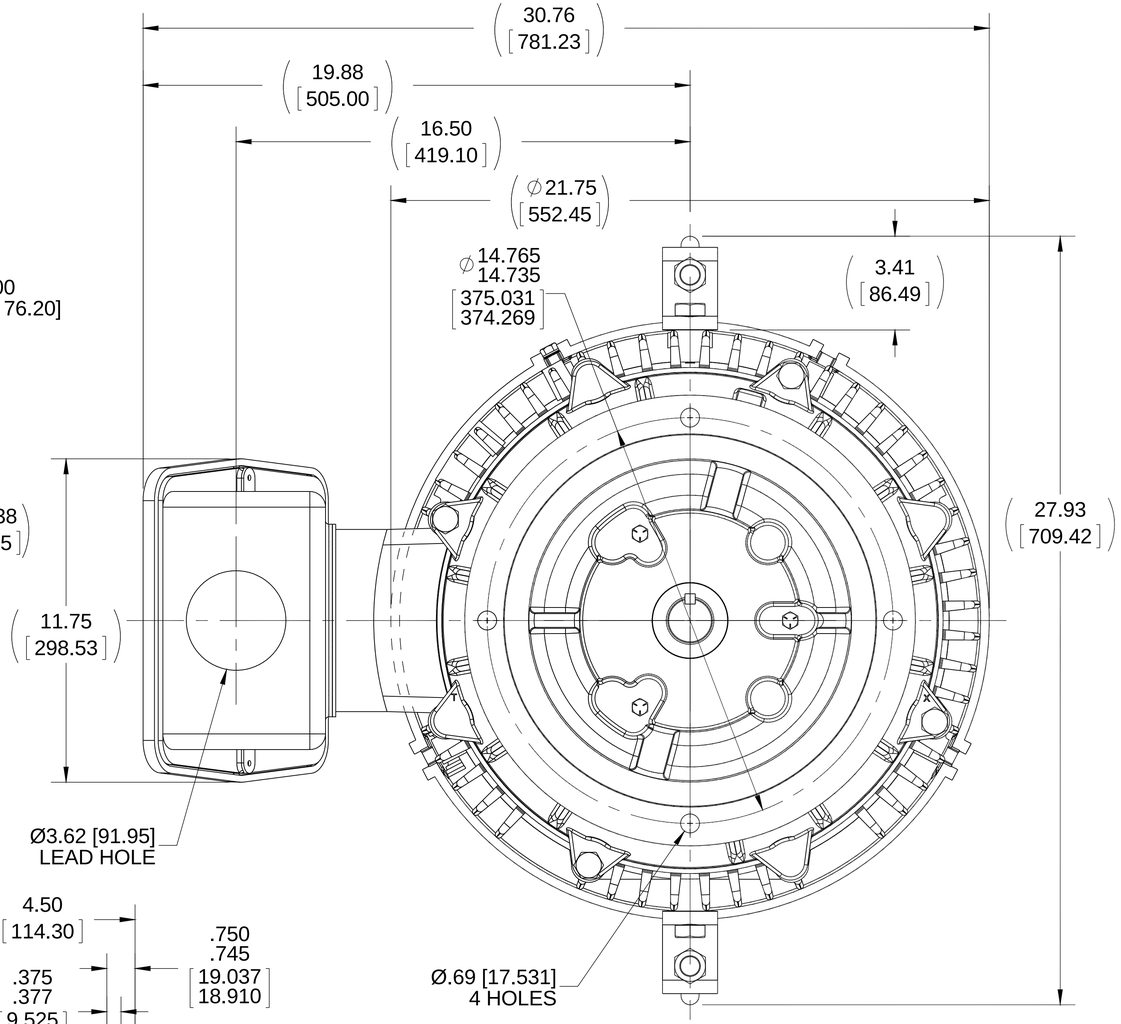

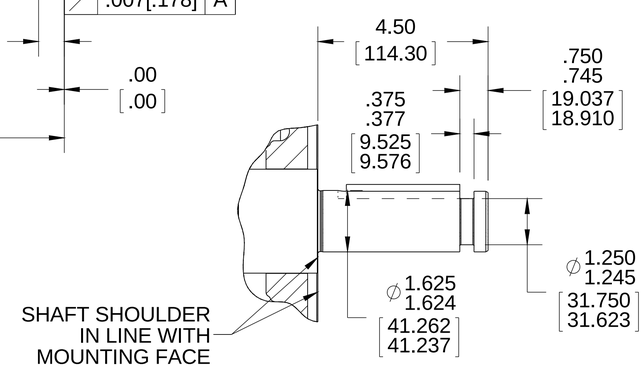

DETAIL OF SHAFT EXTENSION

NOTES:
1. CONDUIT BOX CAN BE ROTATED IN 90° STEPS.
2. NAMEPLATES TO BE READ FROM CONDUIT BOX SIDE OF MOTOR.
3. MAX. SHAFT RUNOUT .003 [.076].
4. MAX. SHAFT ENDPLAY .015 [.381].
5. DIMENSION IN [ ] DESIGNATE MILLIMETERS.

DASH	FRAME	C	AG	BV
1675	400HPV	40.58 [1030.73]	36.08 [916.43]	15.00 [381.00]

DRAWING REVISION	REVISION BY	DATE
G	JJB	09-08-2016
ECO: ECO-0104950	APPROVED BY: JHA	DATE: 09-08-2016

ECO DESCRIPTION: UPDATED TO CURRENT STANDARDS

COPYRIGHT REGAL BELOIT AMERICA, INC. ALL RIGHTS RESERVED.
PROPRIETARY AND CONFIDENTIAL INFORMATION - THIS DOCUMENT IS THE PROPERTY OF REGAL BELOIT AMERICA, INC. ("OWNER") AND CONTAINS OWNER'S PROPRIETARY INFORMATION. ANY PERSON, CORPORATION OR OTHER FIRM RECEIVING IT IS DEEMED, BY RECEIVING IT, TO AGREE THAT IT, AND/OR ANY PART OF IT, SHALL NOT BE DISCLOSED TO ANY PERSON, CORPORATION OR OTHER ENTITY, DUPLICATED, AND/OR USED, EXCEPT AS EXPRESSLY APPROVED IN WRITING IN ADVANCE BY OWNER. THIS DOCUMENT SHALL BE RETURNED TO OWNER UPON REQUEST. IT MAY BE SUBJECT TO CERTAIN RESTRICTIONS UNDER APPLICABLE EXPORT CONTROL LAWS AND REGULATIONS.

TOLERANCES UNLESS OTHERWISE SPECIFIED:

DEC.	INCH	mm	ANGLE
.X	±0.1	[±2.5]	±7' 30"
.XX	±0.03	[±0.76]	
.XXX	±0.005	[±0.127]	
.XXXX	±0.0005	[±0.0127]	

REMOVE BURRS & BREAK SHARP EDGES: .003/.015 [.076/.381] X 45°
CORNER FILLETS: R.02 [.51]
MACHINED SURFACES: 200 INCH / 5.1 mm
mm SHOWN IN [BRACKETS]

DRAWN BY	DD
DATE	04-28-1993
APPROVED BY	TB
DATE	04-30-1993
REFERENCE	
THIRD ANGLE PROJECTION	

REGAL™ Regal Beloit America, Inc.

DESCRIPTION: OUTLINE
400HPV FR. - TEFC - 'P'--BASE - VERT. - SPL. EXT.

MATERIAL | PROCESS/FINISH

SIZE: B | DRAWING NUMBER: SS508404 | SHEET: 1 OF 1