Uncontrolled Copy

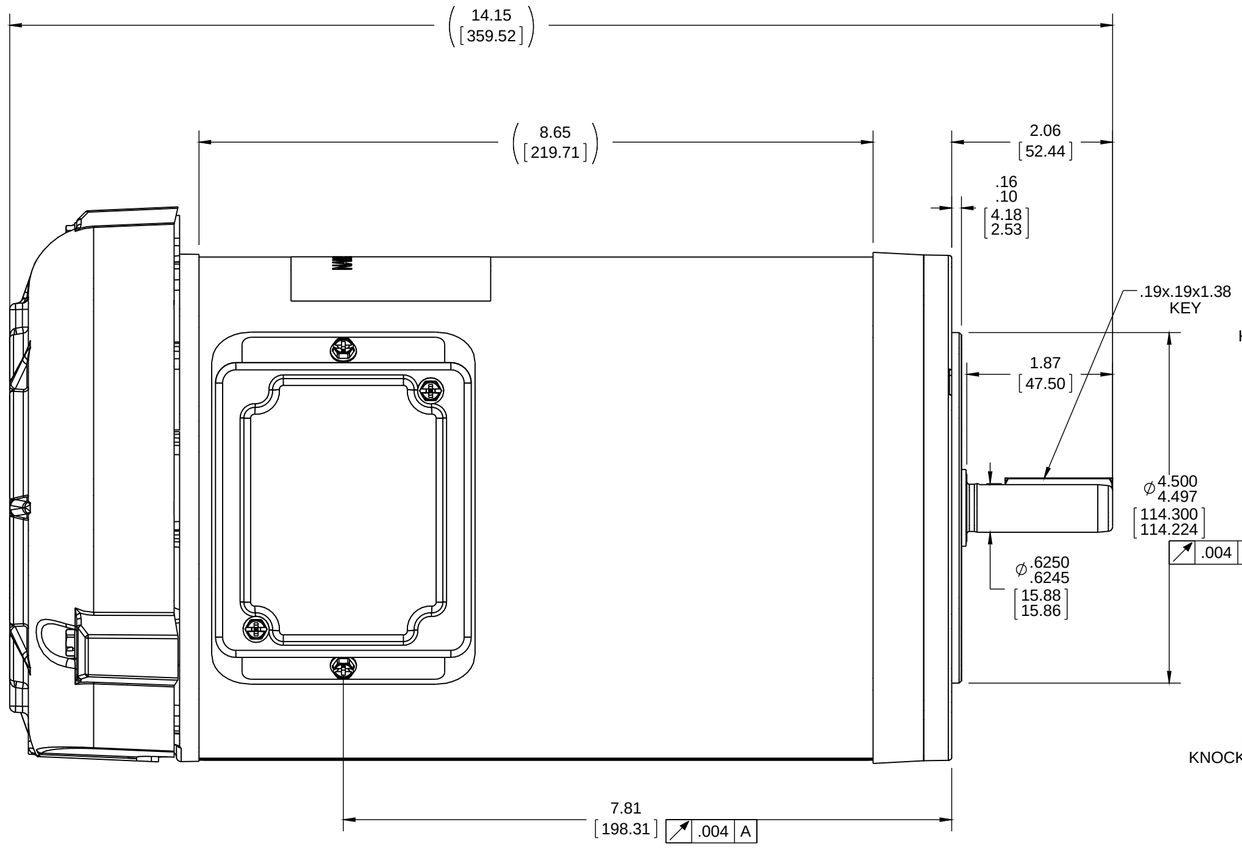

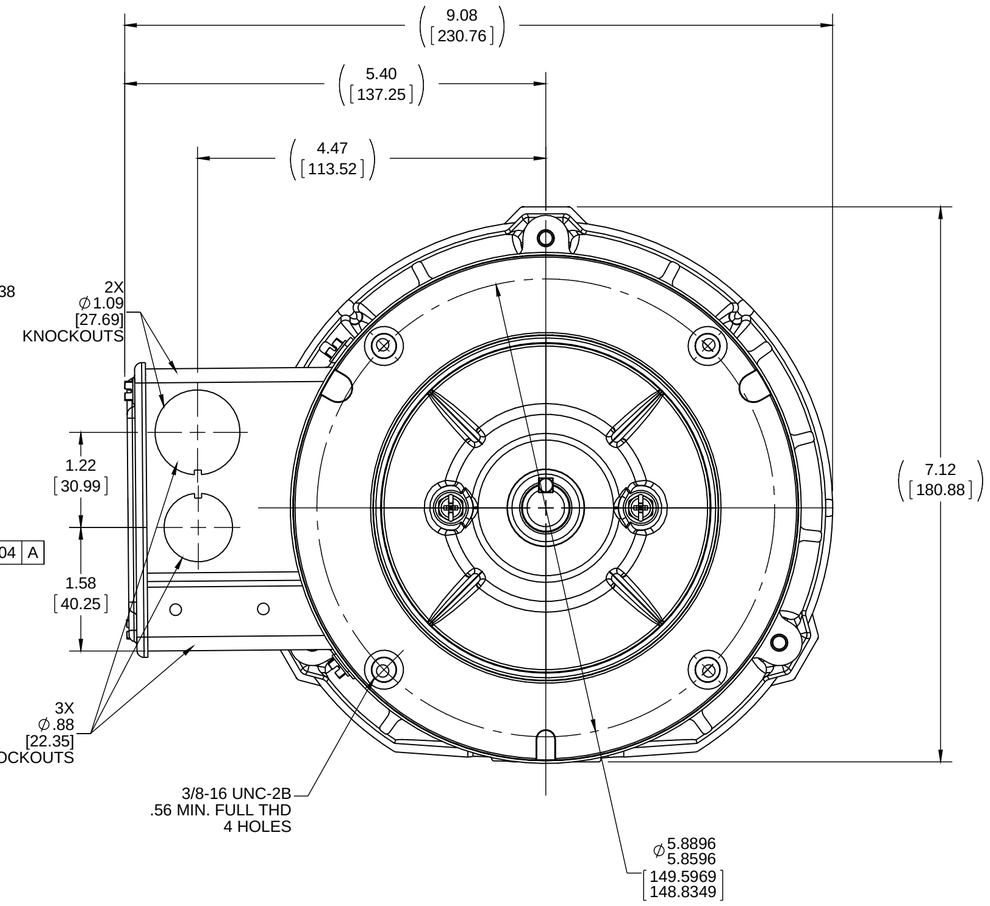

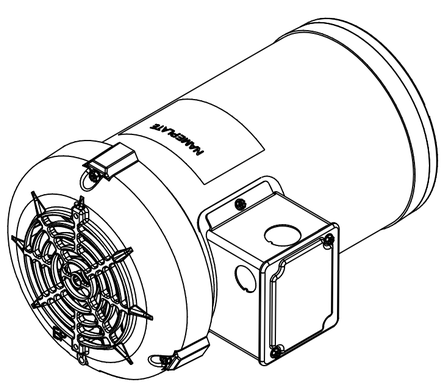

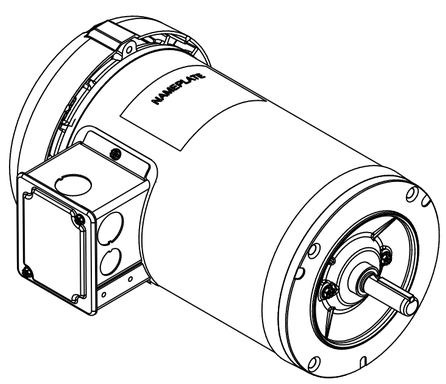

DRAWING REVISION A	REVISION BY M.AVILA	DATE 05-19-2016	TOLERANCES UNLESS OTHERWISE SPECIFIED:	DRAWN BY M.AVILA
ECO ECO-0102242	APPROVED BY	DATE	DEC. INCH mm ANGLE .X ±0.1 [±2.5] ±0.5° .XX ±0.02 [±0.51] .XXX ±0.005 [±0.127] .XXXX ±0.0005 [±0.0127]	DATE 05-19-2016
ECO DESCRIPTION NEW			REMOVE BURRS & BREAK SHARP EDGES: .003/.015 [.076/.381] X 45° CORNER FILLETS: R.02 [.51] MACHINED SURFACES: 125 INCH / 3.2 mm	APPROVED BY
			mm SHOWN IN [BRACKETS]	DATE
				REFERENCE
				THIRD ANGLE PROJECTION

COPYRIGHT REGAL BELOIT AMERICA, INC. ALL RIGHTS RESERVED.
PROPRIETARY AND CONFIDENTIAL INFORMATION - THIS DOCUMENT IS THE PROPERTY OF REGAL BELOIT AMERICA, INC. ("OWNER") AND CONTAINS OWNER'S PROPRIETARY INFORMATION. ANY PERSON, CORPORATION OR OTHER FIRM RECEIVING IT IS DEEMED, BY RECEIVING IT, TO AGREE THAT IT, AND/OR ANY PART OF IT, SHALL NOT BE DISCLOSED TO ANY PERSON, CORPORATION OR OTHER ENTITY, DUPLICATED, AND/OR USED, EXCEPT AS EXPRESSLY APPROVED IN WRITING IN ADVANCE BY OWNER. THIS DOCUMENT SHALL BE RETURNED TO OWNER UPON REQUEST. IT MAY BE SUBJECT TO CERTAIN RESTRICTIONS UNDER APPLICABLE EXPORT CONTROL LAWS AND REGULATIONS.

REGAL™ Regal Beloit America, Inc.

DESCRIPTION
OUTLINE
56H FR,TEFC, C-FACE

MATERIAL	PROCESS/FINISH

SIZE	DRAWING NUMBER	SHEET
C	OL56100100-001	1 OF1