Uncontrolled Copy

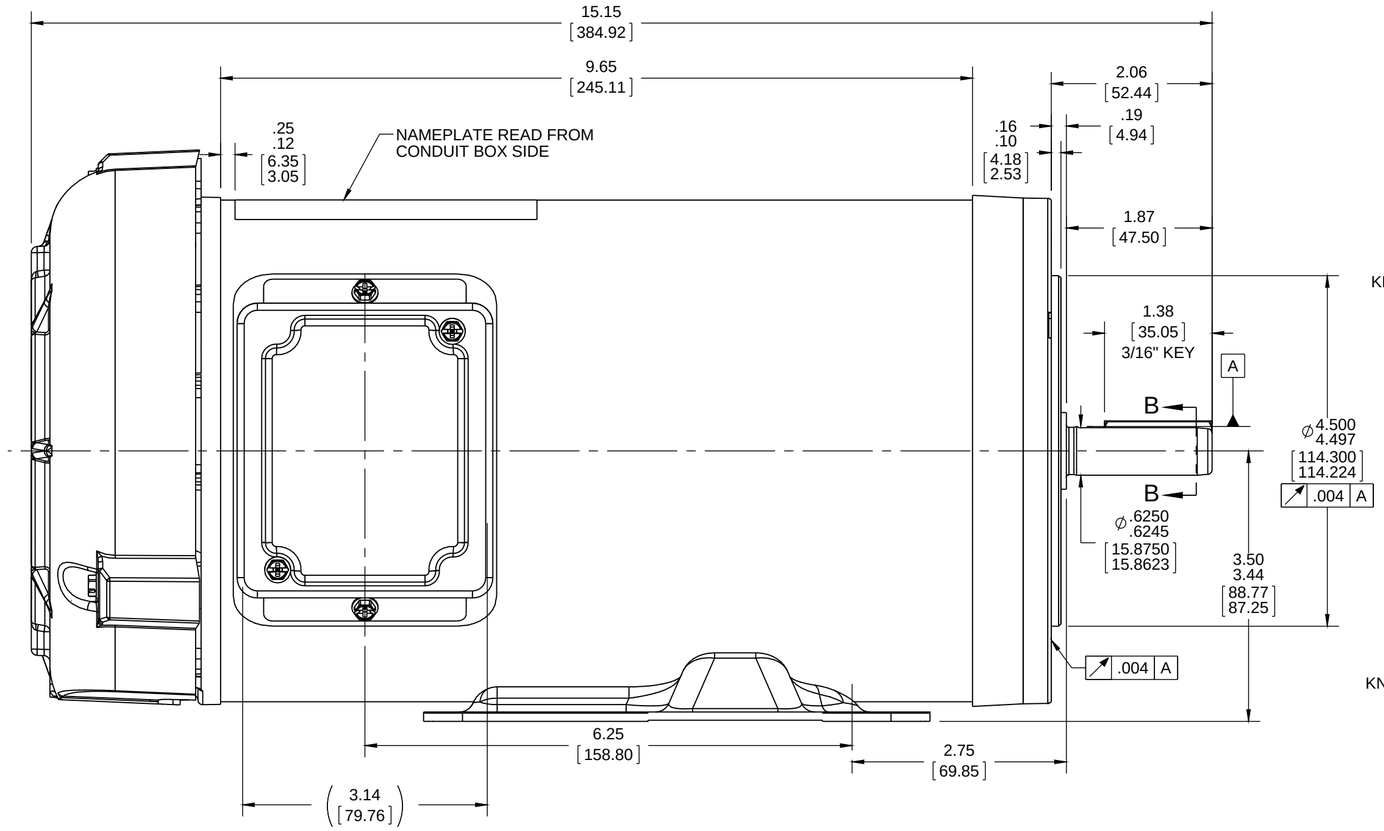

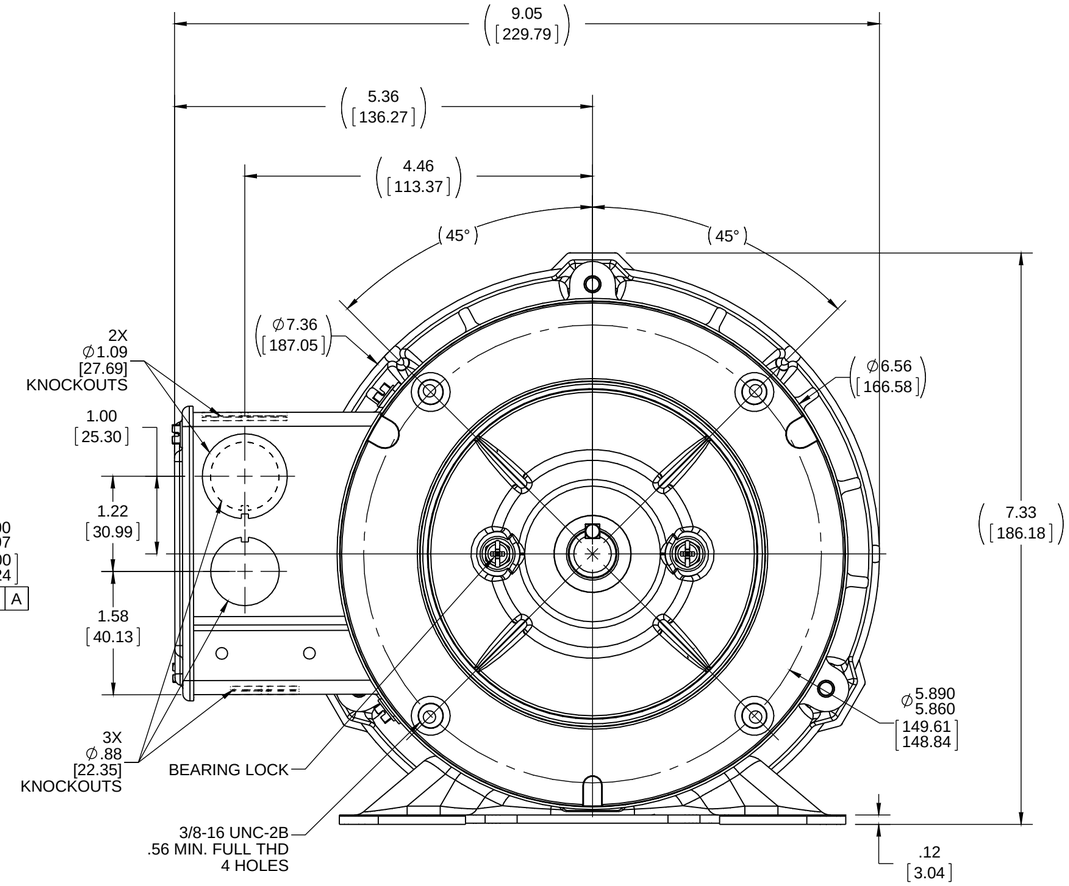

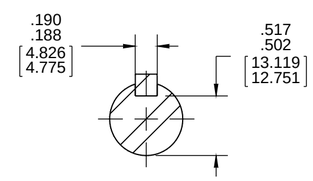

SECTION B-B

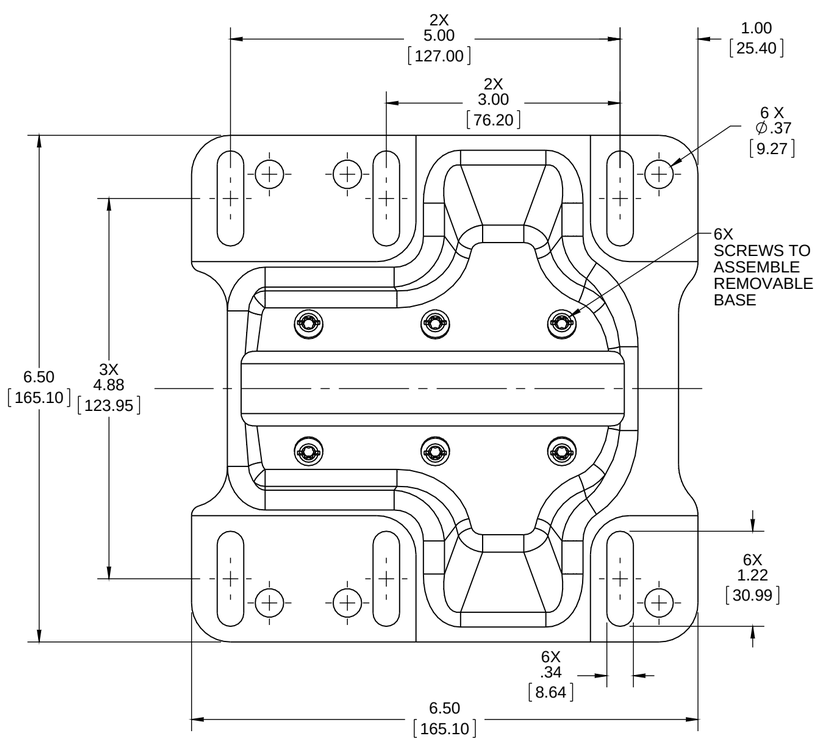

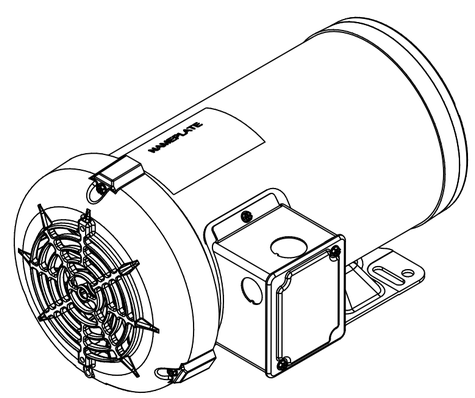

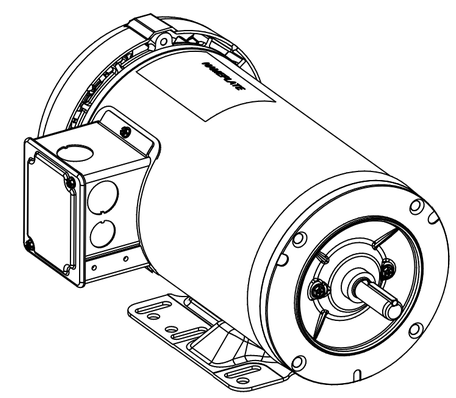

DRAWING REVISION D	REVISION BY R.ZAMARRON	DATE 07-15-2016	TOLERANCES UNLESS OTHERWISE SPECIFIED:	DRAWN BY J.RUIZ
ECO ECO-0106135	APPROVED BY J.ORTEGA	DATE 07-15-2016	DEC. INCH mm ANGLE .X ±0.1 [±2.5] ±0.5° .XX ±0.02 [±0.51] .XXX ±0.005 [±0.127] .XXXX ±0.0005 [±0.0127]	DATE 05-25-2016
ECO DESCRIPTION NEW MODEL RELEASE			REMOVE BURRS & BREAK SHARP EDGES: .003/.015 [.076/.381] X 45° CORNER FILLETS: R.02 [.51] MACHINED SURFACES: 125/ 3.2/ INCH mm mm SHOWN IN [BRACKETS]	APPROVED BY
				DATE
				REFERENCE 56T17F15644
				THIRD ANGLE PROJECTION

COPYRIGHT REGAL BELOIT AMERICA, INC. ALL RIGHTS RESERVED.
PROPRIETARY AND CONFIDENTIAL INFORMATION - THIS DOCUMENT IS THE PROPERTY OF REGAL BELOIT AMERICA, INC. ("OWNER") AND CONTAINS OWNER'S PROPRIETARY INFORMATION. ANY PERSON, CORPORATION OR OTHER FIRM RECEIVING IT IS DEEMED, BY RECEIVING IT, TO AGREE THAT IT, AND/OR ANY PART OF IT, SHALL NOT BE DISCLOSED TO ANY PERSON, CORPORATION OR OTHER ENTITY, DUPLICATED, AND/OR USED, EXCEPT AS EXPRESSLY APPROVED IN WRITING IN ADVANCE BY OWNER. THIS DOCUMENT SHALL BE RETURNED TO OWNER UPON REQUEST. IT MAY BE SUBJECT TO CERTAIN RESTRICTIONS UNDER APPLICABLE EXPORT CONTROL LAWS AND REGULATIONS.

Regal Beloit America, Inc.

DESCRIPTION

OUTLINE

56H FR,TEFC, C-FACE, RIGID

MATERIAL	PROCESS/FINISH	SIZE	DRAWING NUMBER	SHEET
		C	OL56100017-001	1 OF1