SHEET 1 | REV 15 | 52A107631 | DRAWING NO. | SIZE A

THIRD ANGLE PROJECTION

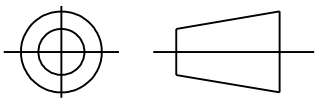

REVISIONS			
REV.	DESCRIPTION	DATE	APPROVED
16	AADED PT# 9 PER DS10-0516	05/07/10	PRAVEEN.K

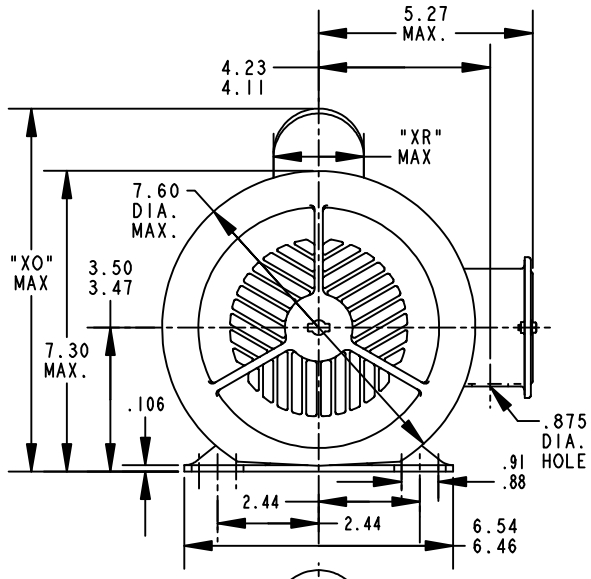

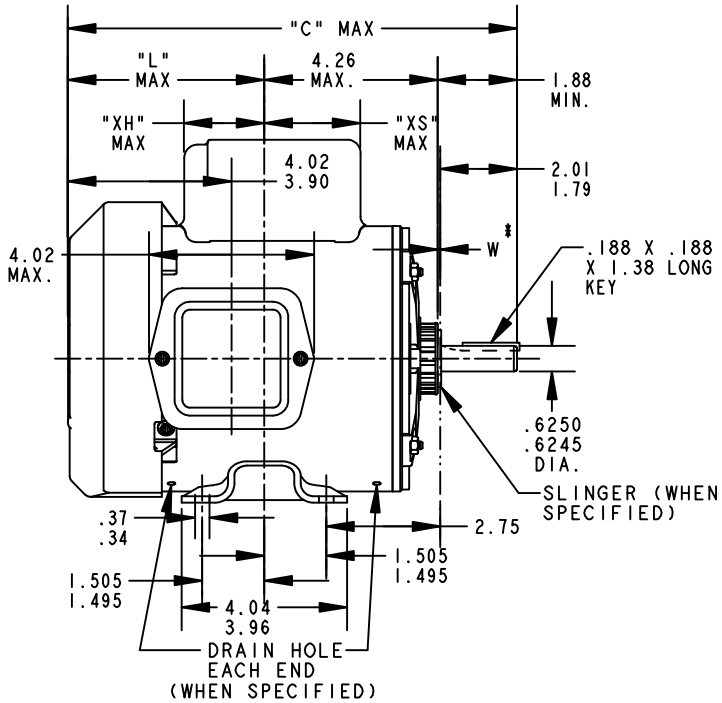

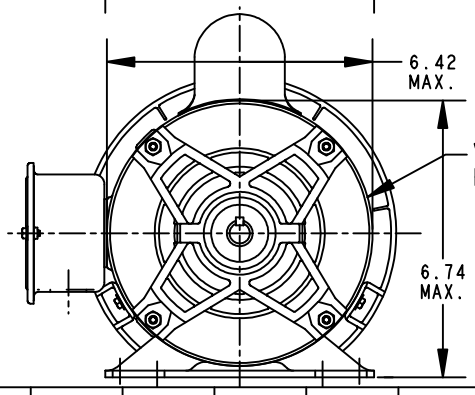

* W IS A VARIABLE CLEARANCE DUE TO VARIATIONS IN PARTS AND ASSEMBLY

ALL DIMENSIONS ARE IN INCHES

P	TYPE	GE SIZE	NEMA FR.	"C"	"L"	"XH"	"XO"	"XR"	"XS"		MIN. SHELL
9	KC	49	56	12.96	6.81	3.58	8.24	1.60	2.17		7.68
8	KC	48	56	13.71	6.05	4.33	8.26	2.40	2.92		8.43
7	KC	49	56	11.43	5.28	2.00	8.26	1.60	2.48		6.15
6	KC	49	56	12.43	6.28	3.51	8.22	1.60	2.24		7.15
5	KC	49	56	12.43	6.28	3.51	8.94	2.40	2.24		7.15
4	KC	49	56	12.96	6.81	3.58	8.94	2.40	2.17		7.68
3	KC	46	56	11.83	5.68	2.91	8.94	2.40	2.84		6.55
2	KC	46	56	11.83	5.68	2.91	8.84	2.22	1.63		6.55
1	KC	42	56	11.00	4.85	2.08	8.84	2.22	2.46		5.72

SIGNATURES		DATE
MODEL	M.D.PAPE	10/23/90
DETAIL	.	.
CHECKED	.	.
ENGRG	.	.
MFG	.	.
QUALITY	.	.
ISSUED	M.D.PAPE	04/27/94

SOLID MODEL: 52A107631

FOR ADDITIONAL INFO REFER TO:
APPLIED PRACTICES .
DIMENSIONS ARE IN INCHES ✓
MATERIAL .

REGAL-BELOIT CORPORATION

TITLE

OUTLINE

GENERAL PURPOSE MOTOR TEFC - BALL BEARING - WELDED BASE FMF - 40 FRAME REDESIGN

SIZE A | DRAWING 52A107631 | REV 15

SCALE: 0.250 | REF. No: . | SHEET 1 OF 1

5/21/2010 11:36:17 AM