SHEET 1 | REV 7 | 52A107728 | DRAWING NO. | SIZE A

THIRD ANGLE PROJECTION

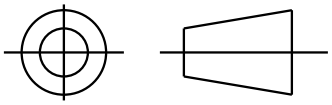

REVISIONS

REV.	DESCRIPTION	DATE	APPROVED
7	CHG TO RBC FORMAT PER IS05-1777	03/01/06	SUDHA

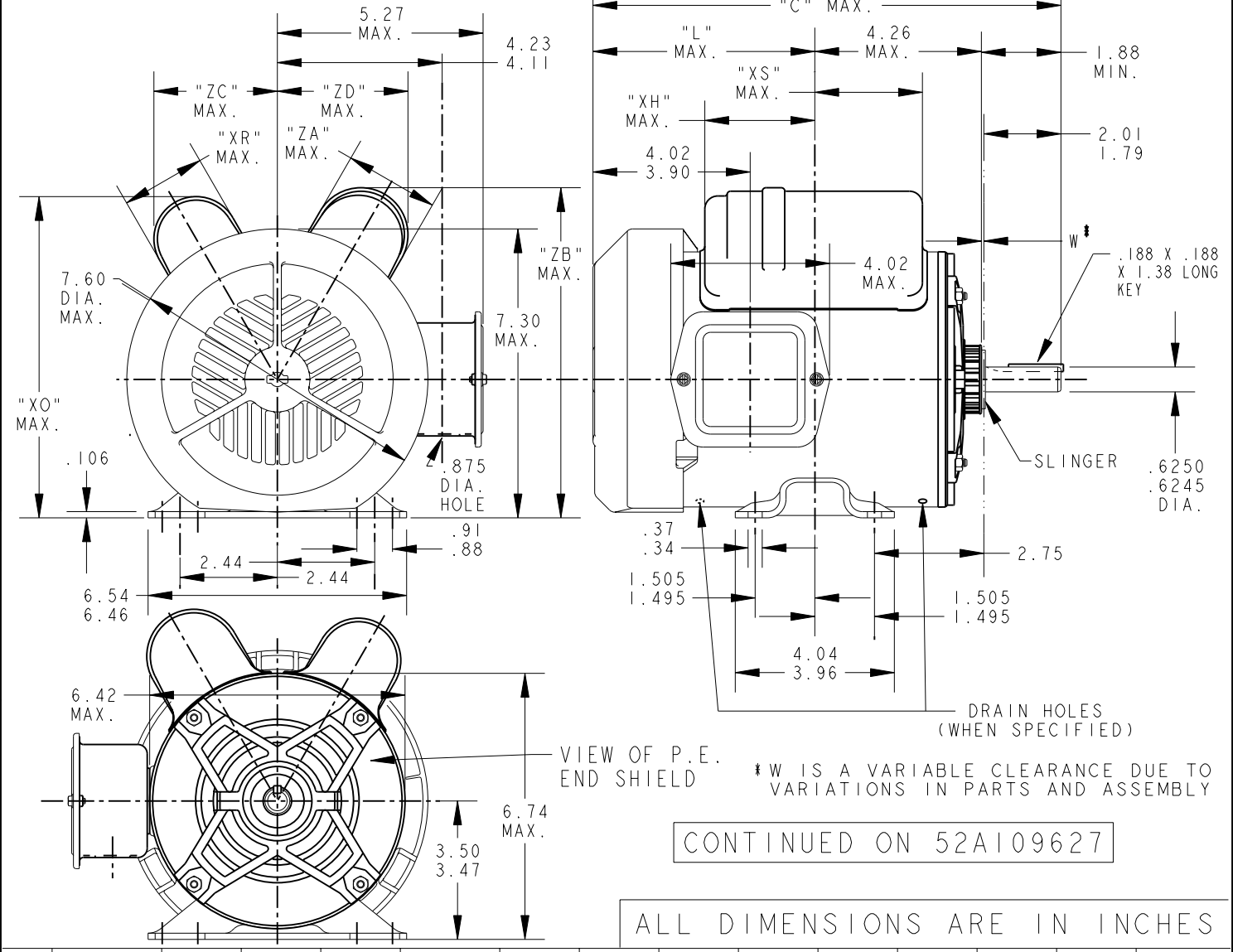

*W IS A VARIABLE CLEARANCE DUE TO VARIATIONS IN PARTS AND ASSEMBLY

CONTINUED ON 52A109627

ALL DIMENSIONS ARE IN INCHES

P	TYPE	GE SIZE	NEMA FR.	"C"	"L"	"XH"	"XO"	"XR"	"XS"	"ZA"	"ZB"	"ZC"	"ZD"	MIN. SHELL
6	KCR	48	56	13.71	7.56	3.53	8.81	2.10	2.16	2.22	8.35	3.14	3.33	8.43
5	KCR	49	56	12.96	6.81	3.61	8.14	2.10	1.99	2.22	8.31	3.12	3.25	7.68
4	KCR	49	56	12.96	6.81	3.58	8.18	2.15	2.17	2.72	8.77	3.20	3.66	7.68
3	KCR	49	56	12.43	6.28	3.51	8.18	2.15	2.24	2.40	8.40	3.20	3.38	7.15
2	KCR	46	56	11.83	5.68	2.91	8.18	2.15	2.84	2.40	8.40	3.20	3.38	6.55
1	KC	46	56	11.83	5.68	2.91	8.18	2.15	2.84	2.40	8.40	3.20	3.38	6.55

SIGNATURES		DATE
MODEL	M.D.PAPE	09/06/91
DETAIL	.	.
CHECKED	.	.
ENGRG	.	.
MFG	.	.
QUALITY	.	.
ISSUED	M.D.PAPE	10/18/95

SOLID MODEL: 52A107728

FOR ADDITIONAL INFO REFER TO:
APPLIED PRACTICES .
DIMENSIONS ARE IN INCHES ✓
MATERIAL .

REGAL BELOIT

REGAL-BELOIT CORPORATION

TITLE

OUTLINE

GENERAL PURPOSE MOTOR TEFC - BALL BEARING

WELDED BASE FMF - 40 FRAME REDESIGN (5KC46NN0039Y)

SIZE A | DRAWING 52A107728 | REV 7

SCALE: 0.250 | REF. No: . | SHEET 1 OF 1