035632

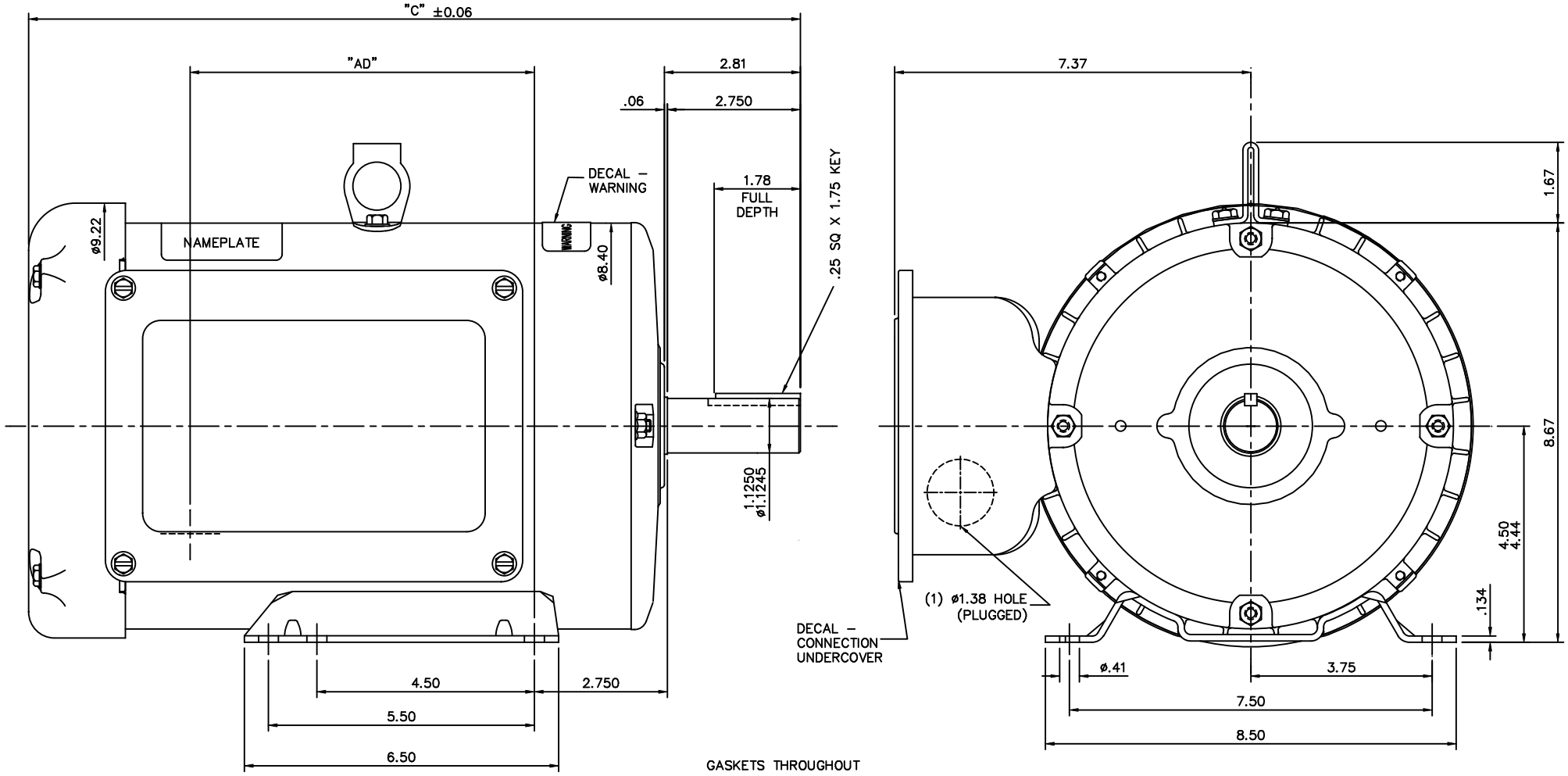

GASKETS THROUGHOUT

MAXIMUM FACE RUNOUT TO BE .004 T.I.R.
MAXIMUM PILOT ECCENTRICITY TO BE .004 T.I.R.
PERMISSIBLE SHAFT RUNOUT TO BE .004 T.I.R.

DASH NO.	"C"	"AD"
1050	15.96	7.12
1100	16.46	7.62
1150	16.96	8.12
1200	17.46	8.62
1100	17.96	9.12
1150	18.46	9.62

NO.	REVISION	BY & DATE	CHK

TOLERANCES UNLESS SPECIFIED

DEC.	INCHES
.X	±0
.XX	±0
.XXX	±0
.XXXX	±0
ANG	±0

MARATHON ELECTRIC

TITLE: OUTLINE – 180T TEFC–RIGID

MAT'L.

FINISH

DRAWN YS 01/21/08

CHK

APPD

SCALE

REF 035540&037596

FMF 184TBFW7726

PREV

RFP

DIST

CAD FILE 035632

SIZE B

DRAWING NO. 035632

REV.

8/4/2009 9:30:21 AM