Uncontrolled Copy

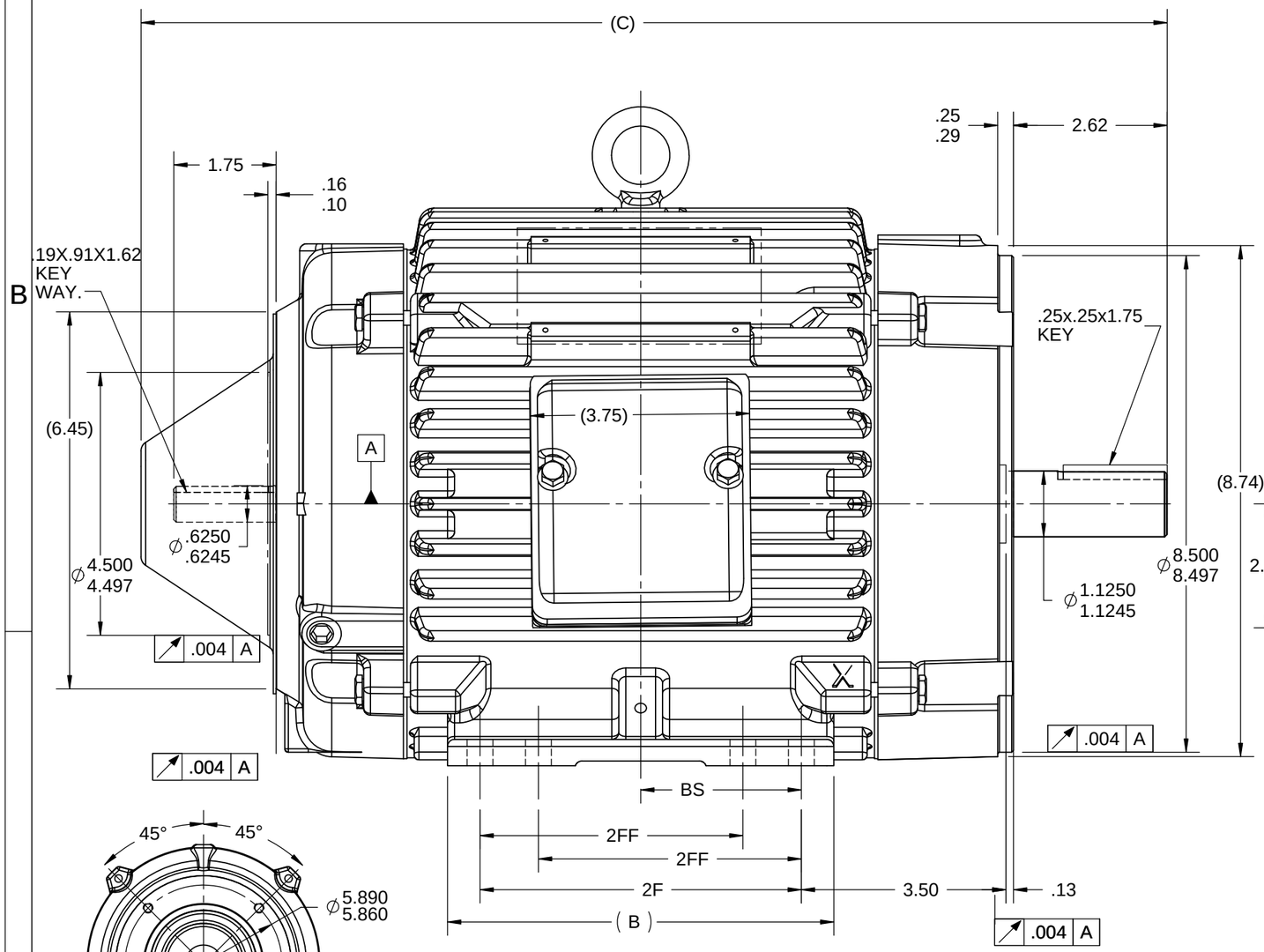

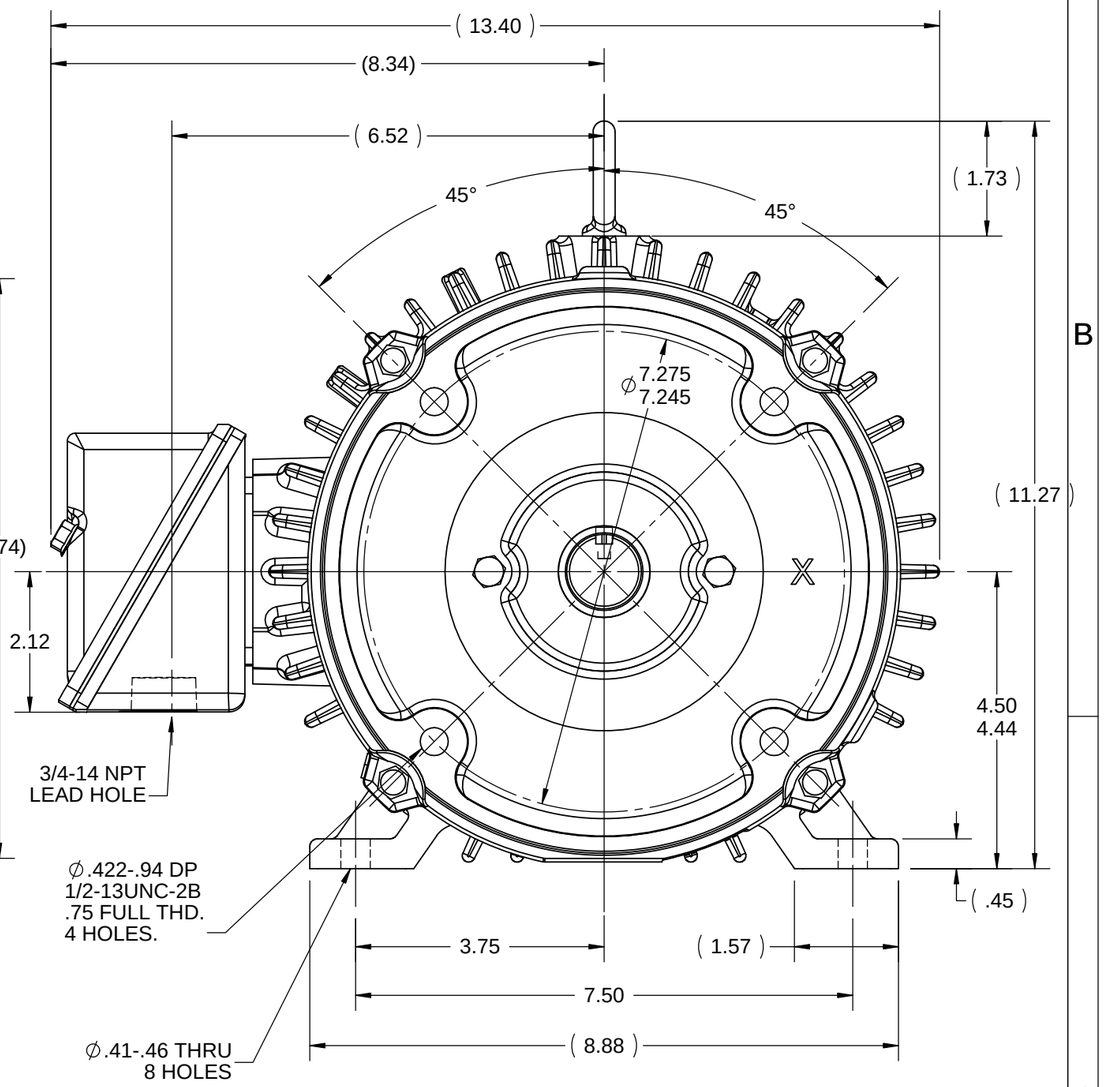

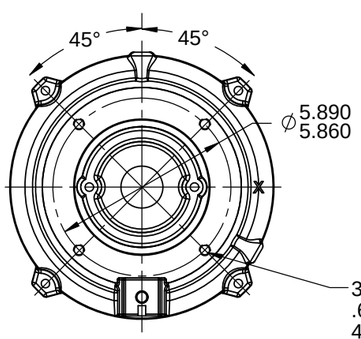

FRONT FACE DETAIL
COVER REMOVED

NOTES:
1. NAMEPLATE TO BE READ FROM CONDUIT BOX SIDE OF MOTOR.
2. CONDUIT BOX CAN ROTATED IN 90° STEPS.
3. CONDUIT BOX CAN BE MOUNTED ON OPPOSITE SIDE BY REMOVING BRACKETS AND TURNING FRAME 180° (NOT FIELD MODIFIABLE ON PMAC MOTORS.)

DASH	FRAME	C	B	2F	2FF	BS
1000	182/184	19.50	8.61	7.50	5.50	3.75
800	182	17.5	6.61	5.50	4.50	2.75

DRAWING REVISION	REVISION BY	DATE
A		
ECO: ECO-0114021	APPROVED BY	DATE
ECO DESCRIPTION: NEW DRAWING		

COPYRIGHT REGAL BELOIT AMERICA, INC. ALL RIGHTS RESERVED.
PROPRIETARY AND CONFIDENTIAL INFORMATION - THIS DOCUMENT IS THE PROPERTY OF REGAL BELOIT AMERICA, INC. ("OWNER") AND CONTAINS OWNER'S PROPRIETARY INFORMATION. ANY PERSON, CORPORATION OR OTHER FIRM RECEIVING IT IS DEEMED, BY RECEIVING IT, TO AGREE THAT IT, AND/OR ANY PART OF IT, SHALL NOT BE DISCLOSED TO ANY PERSON, CORPORATION OR OTHER ENTITY, DUPLICATED, AND/OR USED, EXCEPT AS EXPRESSLY APPROVED IN WRITING IN ADVANCE BY OWNER. THIS DOCUMENT SHALL BE RETURNED TO OWNER UPON REQUEST. IT MAY BE SUBJECT TO CERTAIN RESTRICTIONS UNDER APPLICABLE EXPORT CONTROL LAWS AND REGULATIONS.

TOLERANCES UNLESS OTHERWISE SPECIFIED:

DEC.	INCH	mm	ANGLE
.X	±0.1	[±2.5]	±7' 30"
.XX	±0.03	[±0.76]	
.XXX	±0.005	[±0.127]	
.XXXX	±0.0005	[±0.0127]	

REMOVE BURRS & BREAK SHARP EDGES: .003/.015 [.076/.381] X 45°
CORNER FILLETS: R.02 [.51]
MACHINED SURFACES: 200 INCH / 5.1 mm
mm SHOWN IN [BRACKETS]

DRAWN BY	SR
DATE	11/30/16
APPROVED BY	SR
DATE	11/30/16
REFERENCE	035829
THIRD ANGLE PROJECTION	

REGAL™ Regal Beloit America, Inc.

DESCRIPTION: OUTLINE
180 FR. - CI C'BOX

MATERIAL | PROCESS/FINISH

SIZE: B | DRAWING NUMBER: 036277 | SHEET: 1 OF 1