52A111769

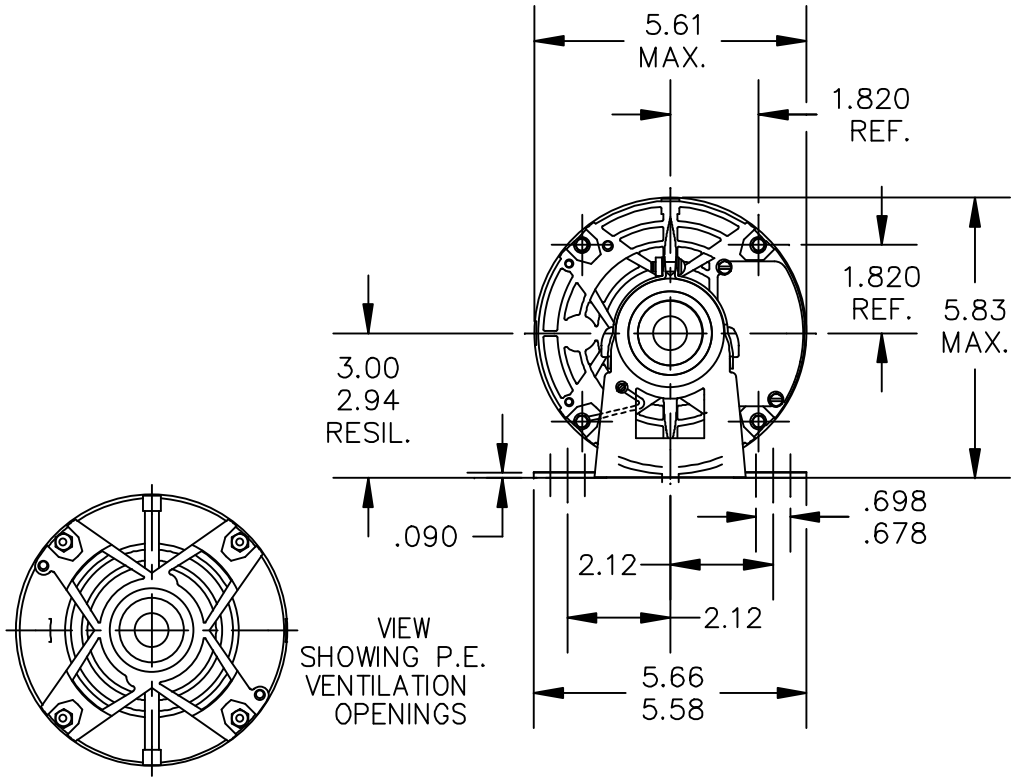


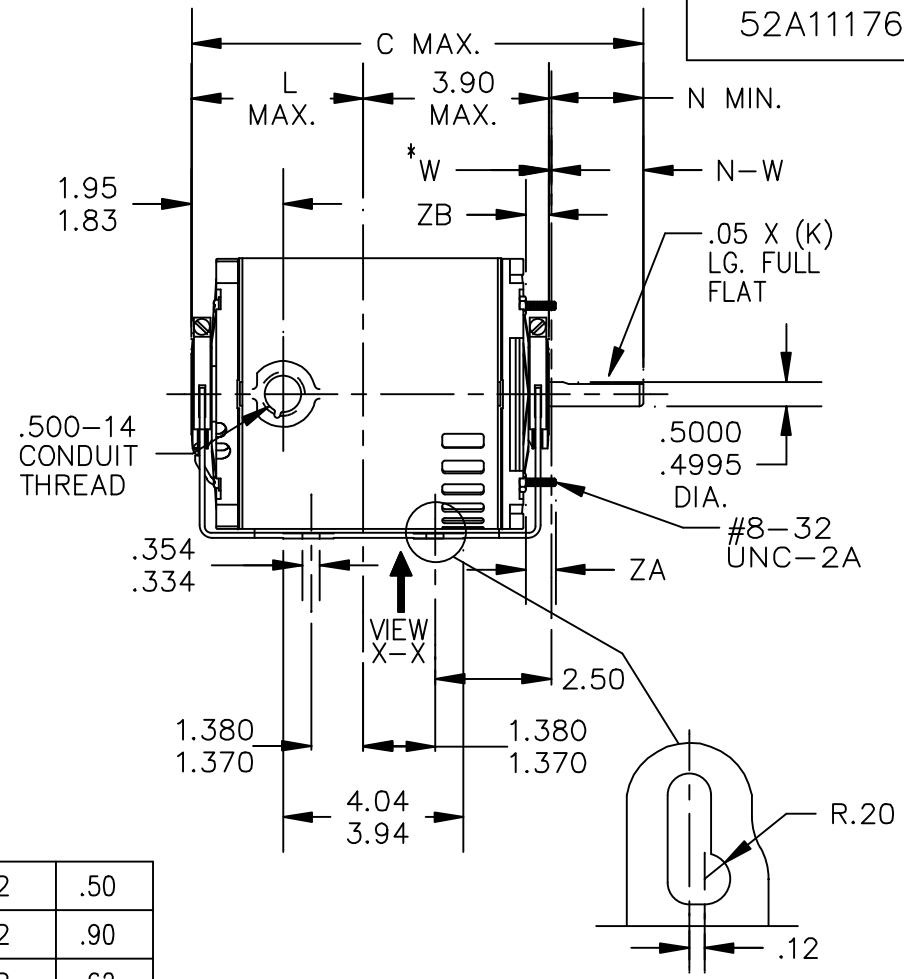


| P | TYPE | RBC SIZE | NEMA FR | C | K | L | N | N–W | ZB | ZA |
|---|---|---|---|---|---|---|---|---|---|---|
| 6 | KH | 35 | 48 | 9.56 | 1.16 | 4.22 | 1.50 | 1.63/1.41 | .55/.52 | .50 |
| 5 | KH | 33 | 48Z | 9.93 | 1.91 | 3.84 | 2.25 | 2.38/2.16 | .55/.52 | .90 |
| 4 | KH | 32 | 48 | 8.93 | 1.16 | 3.59 | 1.50 | 1.63/1.41 | .55/.52 | .62 |
| 3 | KH | 36 | 48 | 9.99 | 1.16 | 4.65 | 1.50 | 1.63/1.41 | .55/.52 | .50 |
| 2 | KH | 32 | 48Z | 9.94 | 1.91 | 3.59 | 2.25 | 2.38/2.16 | .55/.52 | .62 |
| 1 | KH | 32 | 48Z | 9.32 | 1.54 | 3.59 | 1.88 | 2.01/1.79 | .55/.52 | .62 |

W* IS A CLEARNCE DUE TO VARIATION IN PARTS AND ASSEMBLY.

| NO. | REVISION | BY & DATE | CHK |
|---|---|---|---|
| 03 | CHG GD LD FROM 4:30 TO 7:30 PER IS11–0510 & | UD 09/24/12 | PKG |
| | REDRAWN IN DRAFT SIGHT. | | |
| 02 | DIMENSION ADDED PER IS07–2793 | BM 11/15/07 | |
| 01 | UPDATED PER IS07–0144 | MDU 02/20/07 | |

TOLERANCES UNLESS SPECIFIED

| DEC. | INCHES |
|---|---|
| .X | ±0.1 |
| .XX | ±0.02 |
| .XXX | ±0.005 |
| .XXXX | ±0.0005 |
| ANG | ±1.0 |

REGAL BELOIT — REGAL-BELOIT CORPORATION

TITLE: OUTLINE
DRIP PROOF – RESIL. BASE

MAT'L.
FINISH
CAD FILE 52A111769
RFP
DIST

DRAWN MDU 02/02/07
CHK
APPD DS 02/02/07
SCALE 1=1
REF
FMF
PREV

SIZE A | DRAWING NO. 52A111769 | REV. 03