108065

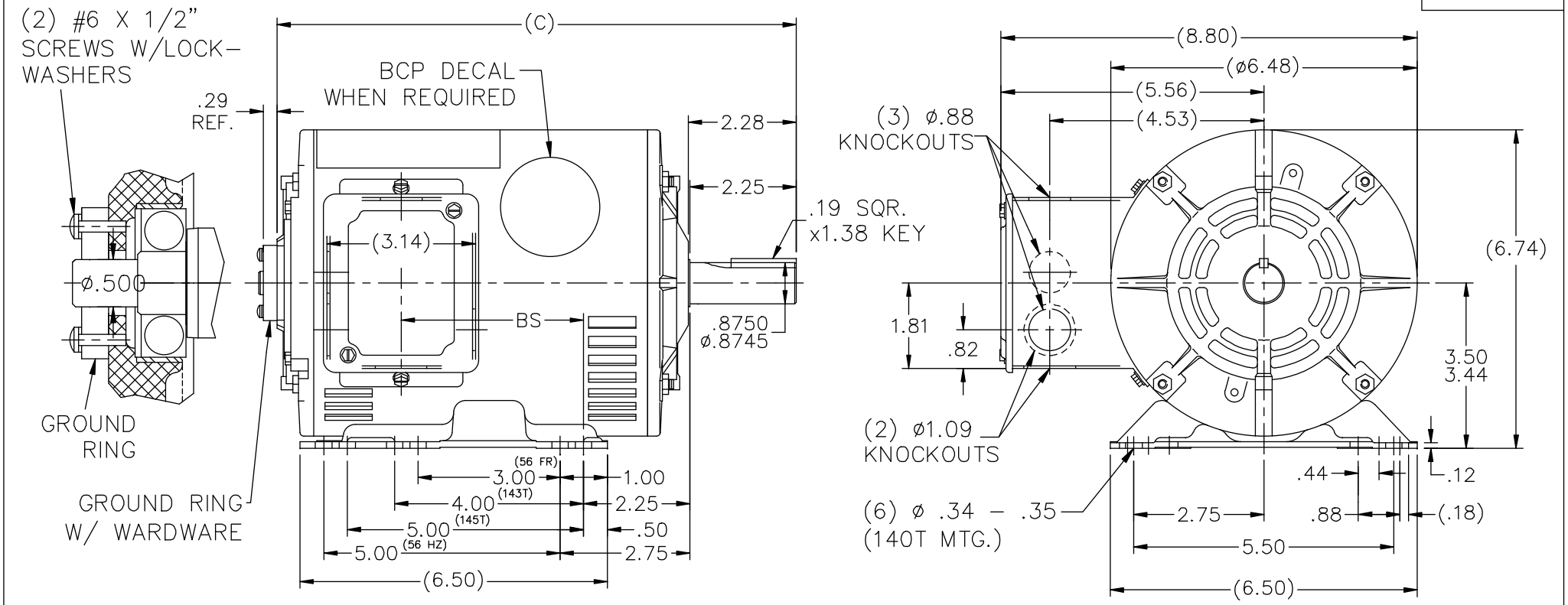

DASH	FR.	C	BS/140T		DASH	FR.	C	BS/140T	
					806	140T/56HZ	11.99	4.86	
					856	"	12.49	5.36	
706	140T/56HZ	10.99	3.86		906	"	12.99	5.86	
756	"	11.49	4.36		956	"	13.49	6.36	

NOTES:
1. CONDUIT BOX CAN BE ROTATED 180°.
2. NAMPLATE READ FROM CONDUIT BOX SIDE.

NO.	REVISION	BY & DATE	CHK

TOLERANCES UNLESS SPECIFIED

DEC.	INCHES
.X	±.1
.XX	±.03
.XXX	±.005
.XXXX	±.0005
ANG	±1/2°

MARATHON ELECTRIC

TITLE: OUTLINE – 140T FRAME & 56HZ – DR. PR.

MAT'L.

FINISH

CAD FILE: 031765

RFP

DIST

SIZE: B

DRAWING NO.: 108065

REV.

DRAWN: LST 6/7/13

CHK

APPD

SCALE: 1=2

REF

FMF

PREV