52A109504

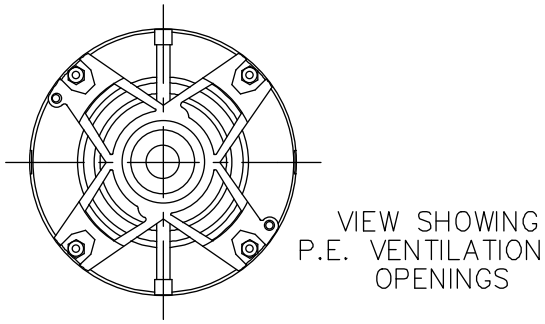

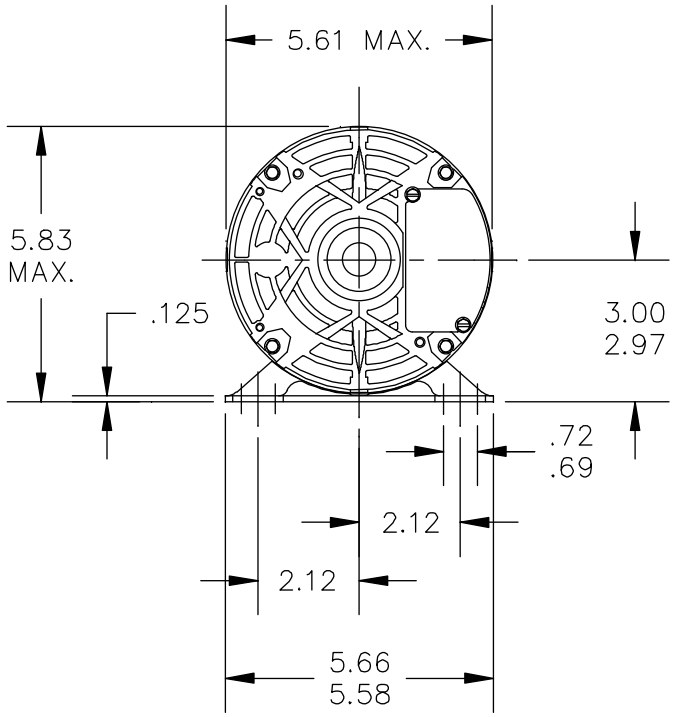

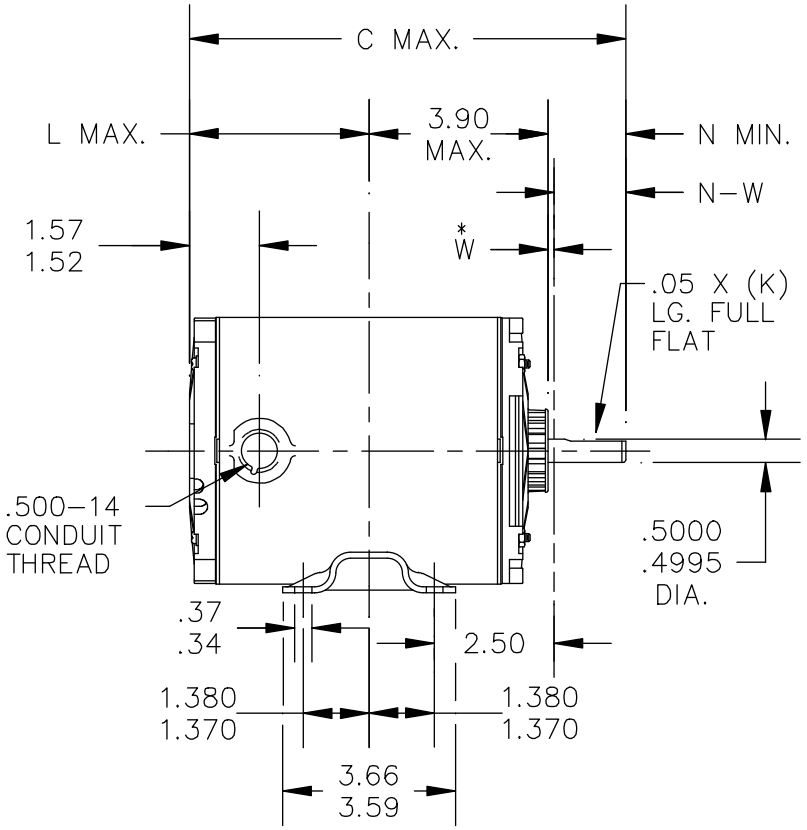

W* IS A CLEARANCE DUE TO VARIATION IN PARTS AND ASSEMBLY.

P	TYPE	RBC SIZE	NEMA FR	C	K	L	N	N–W
3	K	33	48	9.19	1.54	3.41	1.50	1.63/1.41
2	KH	36	48	9.66	1.16	4.65	1.50	1.63/1.41
1	KH	35	48	9.23	1.16	4.25	1.50	1.63/1.41

NO.	REVISION	BY & DATE	CHK
5	REDRAWN IN DRAFT SIGHT NO CHANGES	UD 10/18/12	PKG
4	MOD. "K" DIM. IN P#3 FROM 1.16 TO 1.54	MD 09/19/08	
3	CHG PT# 3 "C" DIM PER IS06–0429	PKG 05/08/06	
2	UPDATED AS PER ISAAC 05–3081	PKG 12/02/05	
1	ADDED P # 3	M.A.M07/08/94	

TOLERANCES UNLESS SPECIFIED

DEC.	INCHES
.X	±0.1
.XX	±0.02
.XXX	±0.005
.XXXX	±0.0005
ANG	±1.0

REGAL BELOIT — REGAL-BELOIT CORPORATION

TITLE: OUTLINE
DRIP PROOF WELDED BASE

MAT'L.
FINISH
CAD FILE 52A109504
RFP
DIST

DRAWN M.D.P 03/14/94
CHK
APPD M.D.P 03/14/94
SCALE 1=1
REF
FMF
PREV

SIZE A | DRAWING NO. 52A109504 | REV. 5