Uncontrolled Copy

DASH	FRAME	C	B	2F	2FF	BS
9419	182/184	14.66 [372.39]	7.44 [188.93]	4.50 [114.30]	5.50 [139.70]	2.99 [75.98]

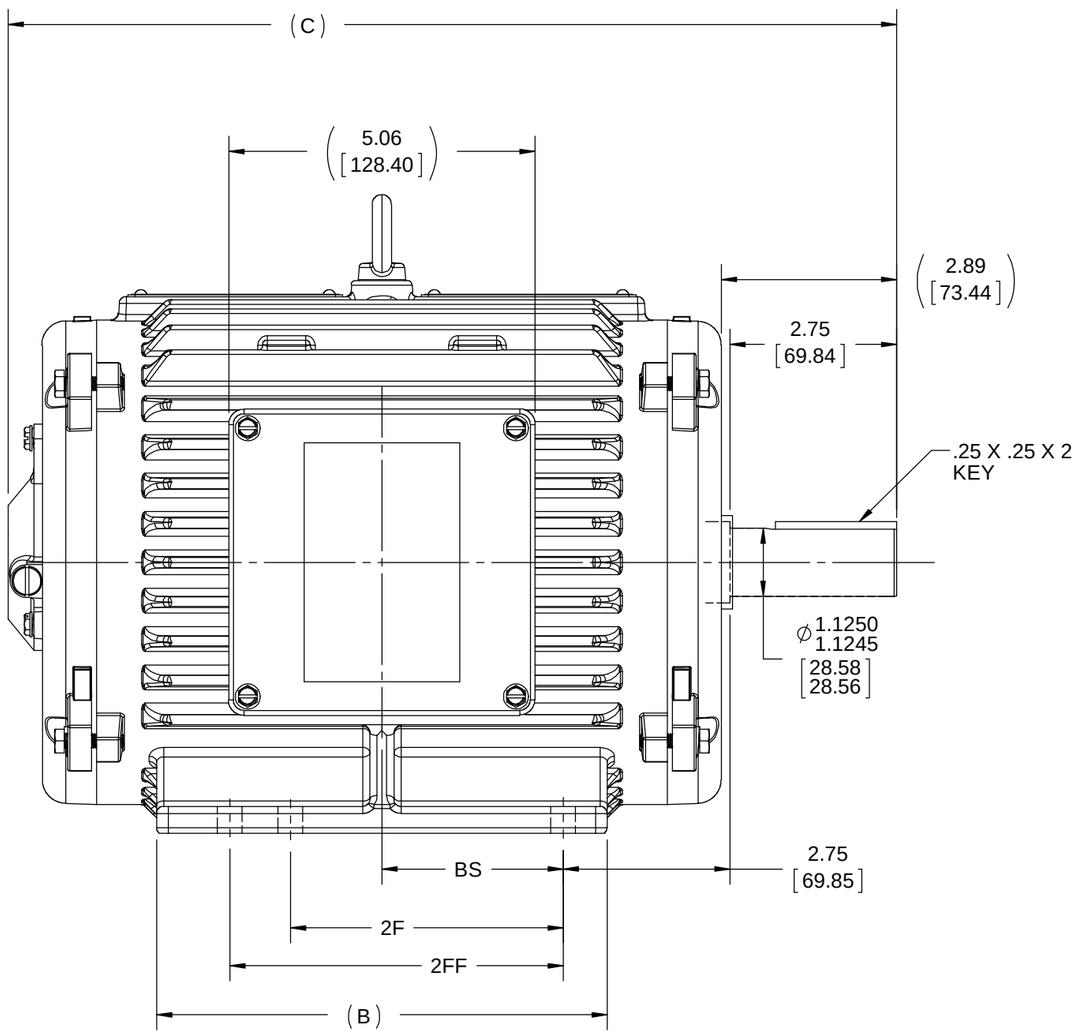

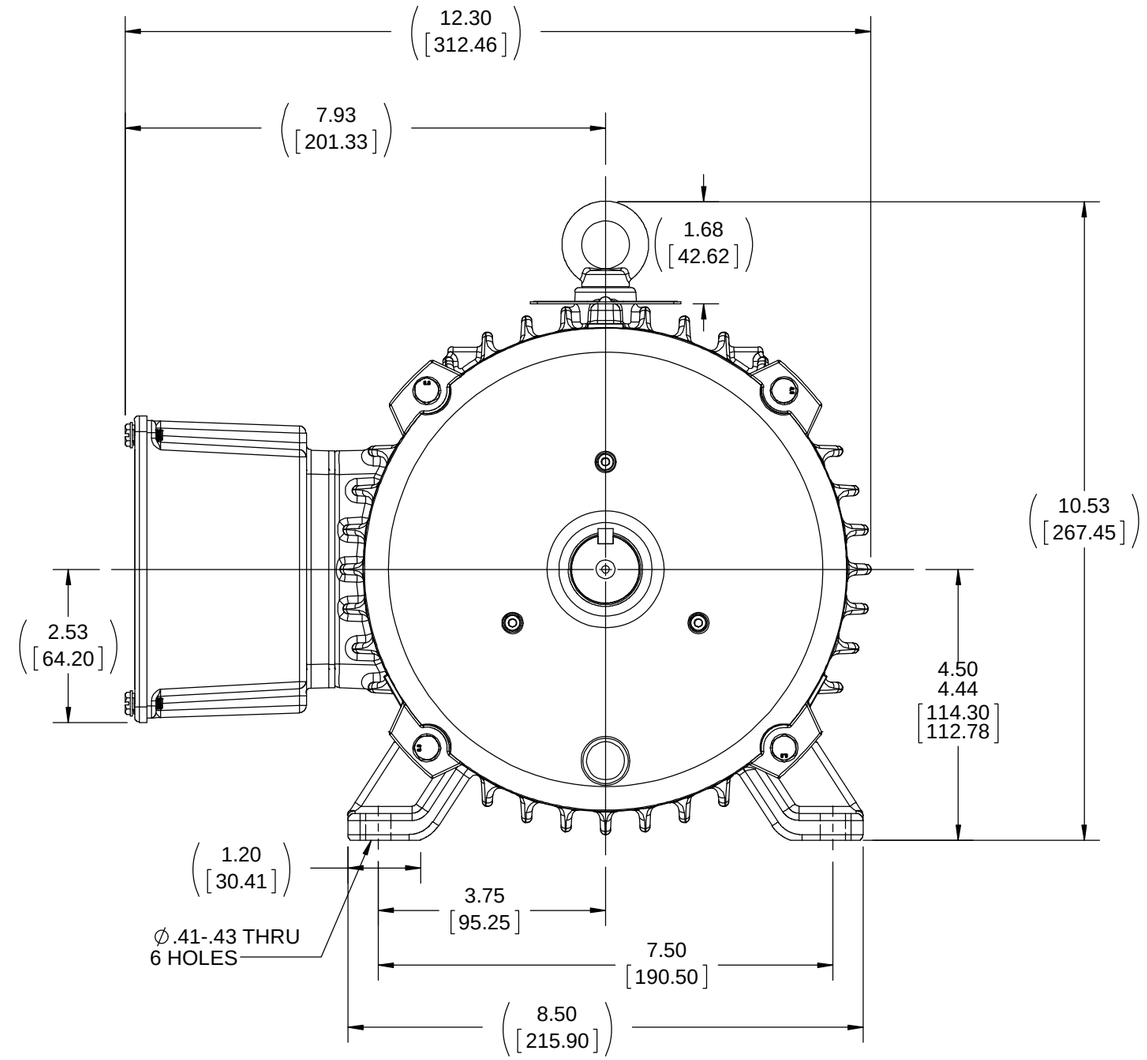

NOTES: (UNLESS OTHERWISE SPECIFIED)

1. ALL DIMENSIONS & TOLERANCES APPLY POST- FINISH OR PLATING.
2. CRITICAL TO FUNCTION DIMENSIONS ARE INSIDE OVAL BORDER. QUERY SOLID MODEL (IGES) FOR COMPLETE PART DEFINITION.

DRAWING REVISION	REVISION BY	DATE
C	GNK	08/09/2018
ECO: ECO-0150486	APPROVED BY: GNK	DATE: 08/09/2018

ECO DESCRIPTION: SHEET 1 DELETED

COPYRIGHT REGAL BELOIT AMERICA, INC. ALL RIGHTS RESERVED.
PROPRIETARY AND CONFIDENTIAL INFORMATION - THIS DOCUMENT IS THE PROPERTY OF REGAL BELOIT AMERICA, INC. ("OWNER") AND CONTAINS OWNER'S PROPRIETARY INFORMATION. ANY PERSON, CORPORATION OR OTHER FIRM RECEIVING IT IS DEEMED, BY RECEIVING IT, TO AGREE THAT IT, AND/OR ANY PART OF IT, SHALL NOT BE DISCLOSED TO ANY PERSON, CORPORATION OR OTHER ENTITY, DUPLICATED, AND/OR USED, EXCEPT AS EXPRESSLY APPROVED IN WRITING IN ADVANCE BY OWNER. THIS DOCUMENT SHALL BE RETURNED TO OWNER UPON REQUEST. IT MAY BE SUBJECT TO CERTAIN RESTRICTIONS UNDER APPLICABLE EXPORT CONTROL LAWS AND REGULATIONS.

TOLERANCES UNLESS OTHERWISE SPECIFIED:

DEC.	mm	INCH	ANGLE
.X	±2.5	[±0.10]	±0.5°
.XX	±0.25	[±0.010]	
.XXX	±0.130	[±0.0051]	
.XXXX	±0.0130	[±0.00051]	

REMOVE BURRS & BREAK SHARP
EDGES: .08/.38 [.003/.015] X 45 °
CORNER FILLETS: R.50 [.020]
MACHINED SURFACES: 125 INCH / 3.2 mm
INCH SHOWN IN [BRACKETS]

DRAWN BY
DATE
APPROVED BY
DATE
REFERENCE
THIRD ANGLE PROJECTION

REGAL™ Regal Beloit America, Inc.

DESCRIPTION: OUTLINE
NOVAMAX, 182/184T, TEAO/TENV, RIGID

MATERIAL | PROCESS/FINISH

SIZE: B | DRAWING NUMBER: 520-00505 | SHEET: 1 OF 1