SS620573

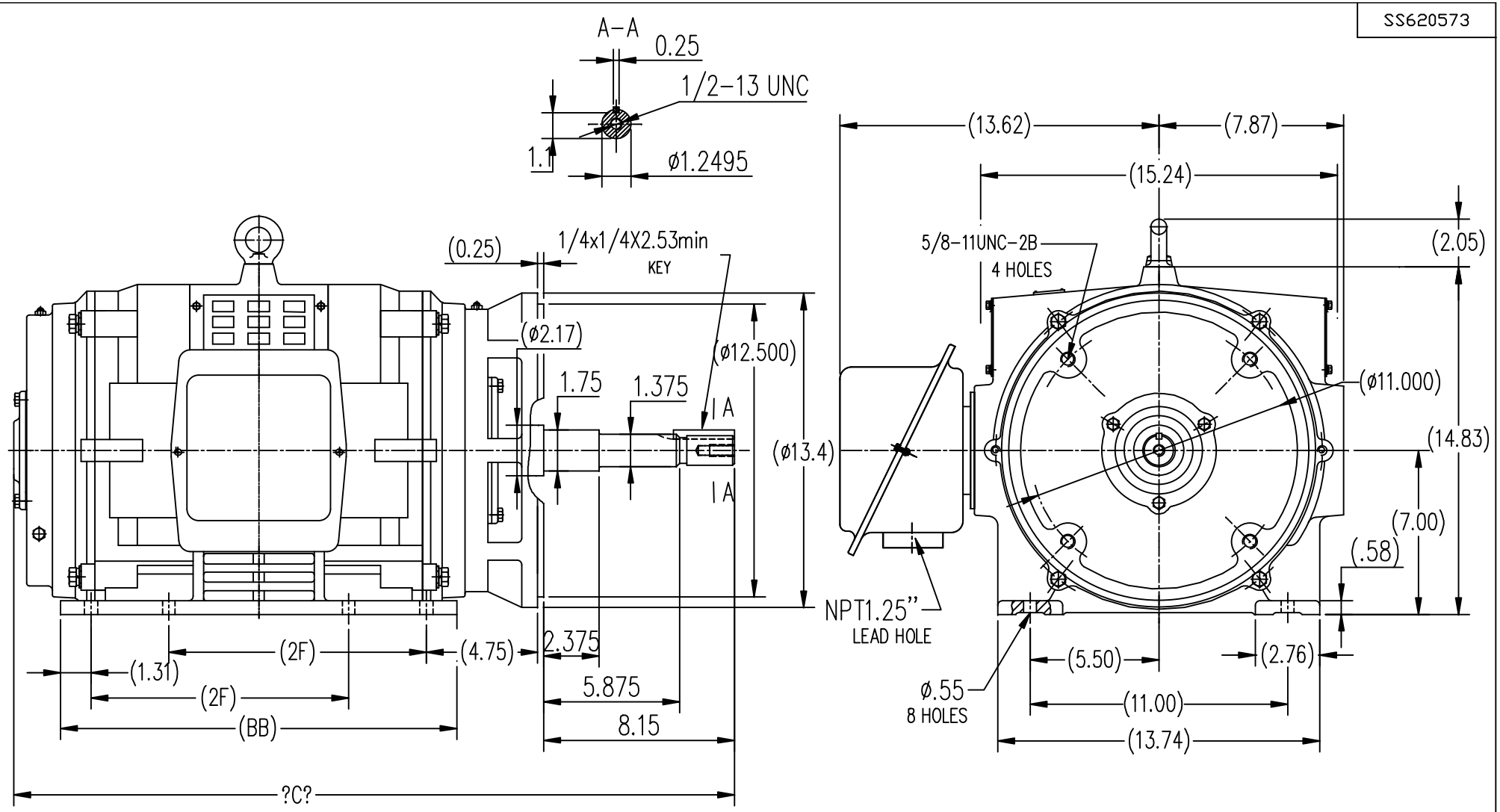

284T	9.50	15.55	29.48
286T	11.00	16.93	29.99
FRAME	2F	BB	C

NO.	REVISION	BY & DATE	CHK

TOLERANCES UNLESS SPECIFIED

DEC.	INCHES
.X	±.1
.XX	±.03
.XXX	±.005
.XXXX	±.0005
ANG	±1/2

REGAL-BELOIT CORPORATION

TITLE: OUTLINE
ODP-284/286JP FR-CAST IRON

MAT'L.
FINISH
CAD FILE: SS620573
RFP
DIST

DRAWN Lee 05-16-2012
CHK HPH 05-16-2012
APPD JGX 05-16-2012
SCALE 1=6
REF
FMF HWADA
PREV

SIZE B
DRAWING NO. SS620573
REV.