SS600024

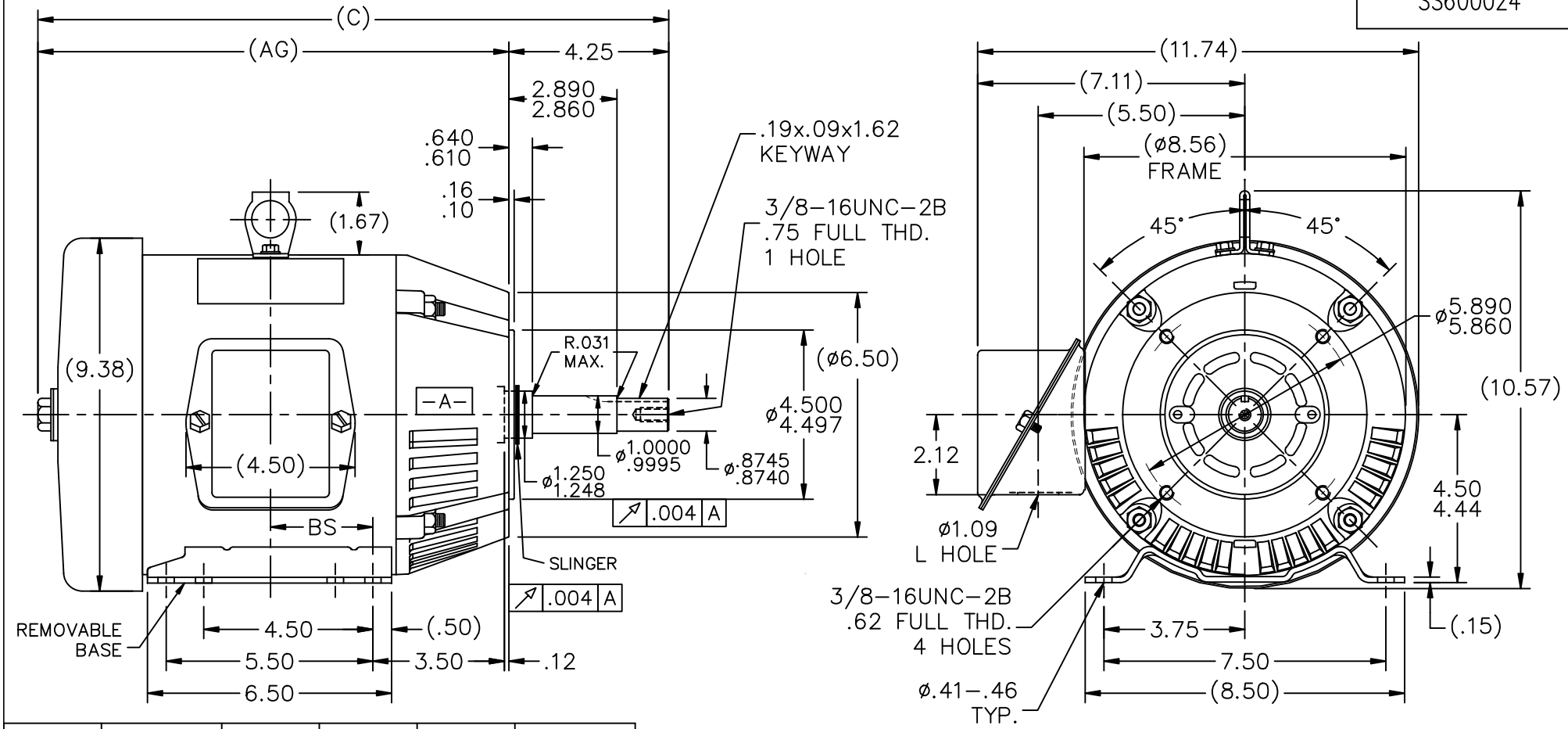

DASH	FRAME	C	AG	BS	MOUNTING
575	182T	15.78	11.53	2.25	F1 OR F2
675	182/184T	16.78	12.53	2.75	F1 OR F2
725	182/184T	17.28	13.03	3.00	F1 ONLY
775	182/184T	17.78	13.53	3.25	F1 ONLY
825	182/184T	18.28	14.03	3.50	F1 ONLY
875	182/184T	18.78	14.53	3.75	F1 ONLY

NOTES:
1. CONDUIT BOX CAN BE ROTATED IN 90° STEPS.
2. CONDUIT BOX CAN BE MOUNTED ON OPPOSITE SIDE BY REMOVING BRACKETS AND TURNING FRAME 180°.
3. NAMEPLATE TO BE READ FROM CONDUIT BOX SIDE OF MOTOR.

NO.	REVISION	BY & DATE	CHK

TOLERANCES UNLESS SPECIFIED

DEC.	INCHES
.X	±.1
.XX	±.03
.XXX	±.005
.XXXX	±.0005
ANG	±7'30"

MARATHON ELECTRIC

TITLE OUTLINE – DRIP PROOF
180T FR. – BB – TS – C'FACE

MAT'L.
FINISH
CAD FILE SS600024
RFP
DIST

DRAWN MSG 04–23–2010
CHK DR 4/26/2010
APPD MJS 4/26/2010
SCALE 1=4
REF
FMF MU95189
PREV

SIZE A | DRAWING NO. SS600024 | PAGE OF | REV.

THIS DRAWING IN DESIGN AND DETAIL IS OUR PROPERTY AND MUST NOT BE USED EXCEPT IN CONNECTION WITH OUR WORK ALL RIGHTS OF DESIGN AND INVENTION ARE RESERVED
THIS IS AN ELECTRONICALLY GENERATED DOCUMENT – DO NOT SCALE THIS PRINT

4/27/2010 7:19:41 AM