SS403781

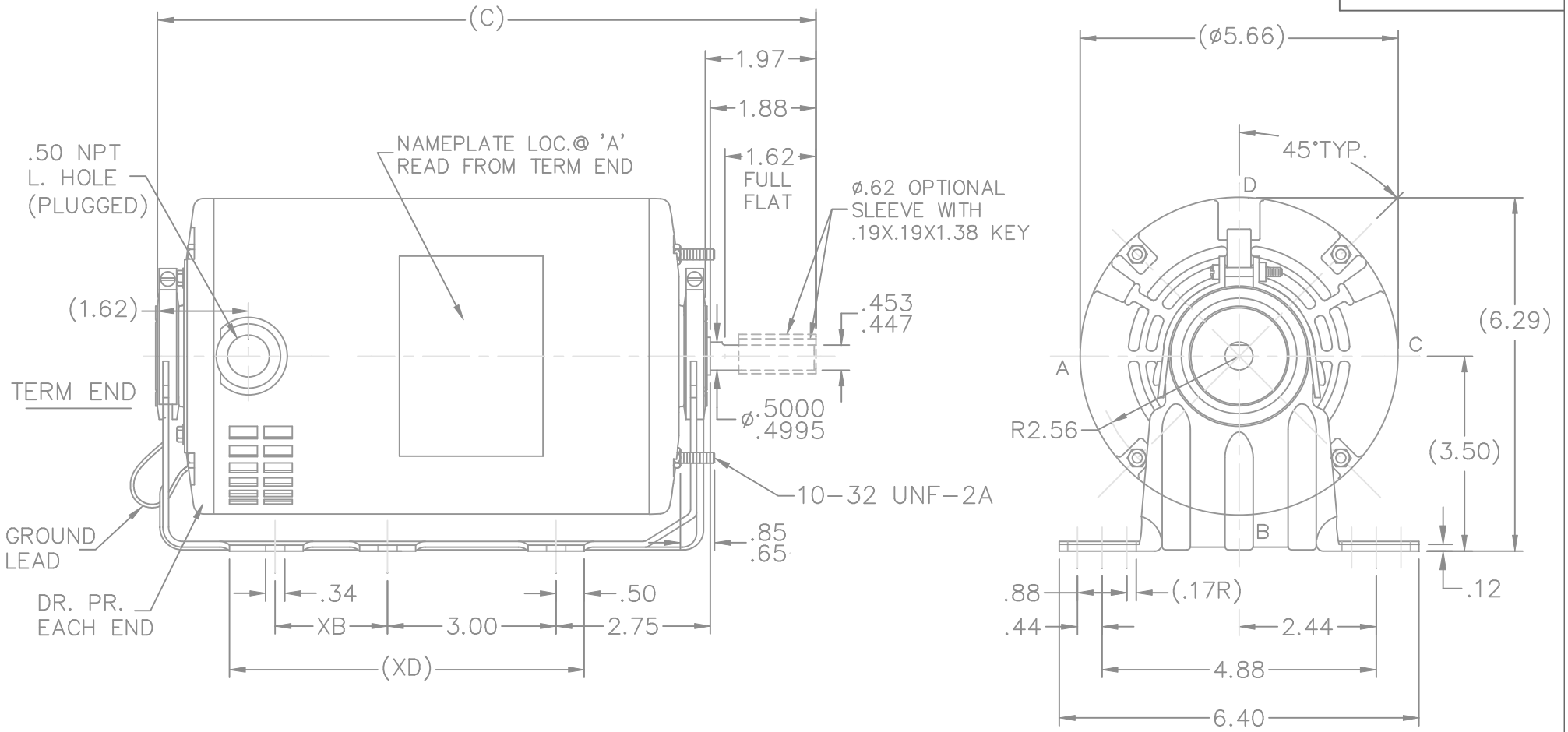

DASH	FRAME	C	XD	XB
550	48	9.47	4.00	0
575	48	9.72	4.31	0
650	48	10.47	5.00	0

NO.	REVISION	BY & DATE	CHK

TOLERANCES UNLESS SPECIFIED

DEC.	INCHES
.X	±.1
.XX	±.03
.XXX	±.005
.XXXX	±.0005
ANG	±7'30"

MARATHON ELECTRIC

TITLE OUTLINE

MAT'L.

FINISH

CAD FILE ss403781

RFP

DIST WP

DRAWN	RP	10-07-2008
CHK	SP	10-07-2008
APPD	NB	10-07-2008
SCALE	3=8	
REF		
FMF		
PREV		

SIZE A | DRAWING NO. SS403781 | PAGE OF | REV.

THIS DRAWING IN DESIGN AND DETAIL IS OUR PROPERTY AND MUST NOT BE USED EXCEPT IN CONNECTION WITH OUR WORK ALL RIGHTS OF DESIGN AND INVENTION ARE RESERVED
THIS IS AN ELECTRONICALLY GENERATED DOCUMENT – DO NOT SCALE THIS PRINT

10/17/2008 9:36:29 AM