Uncontrolled Copy

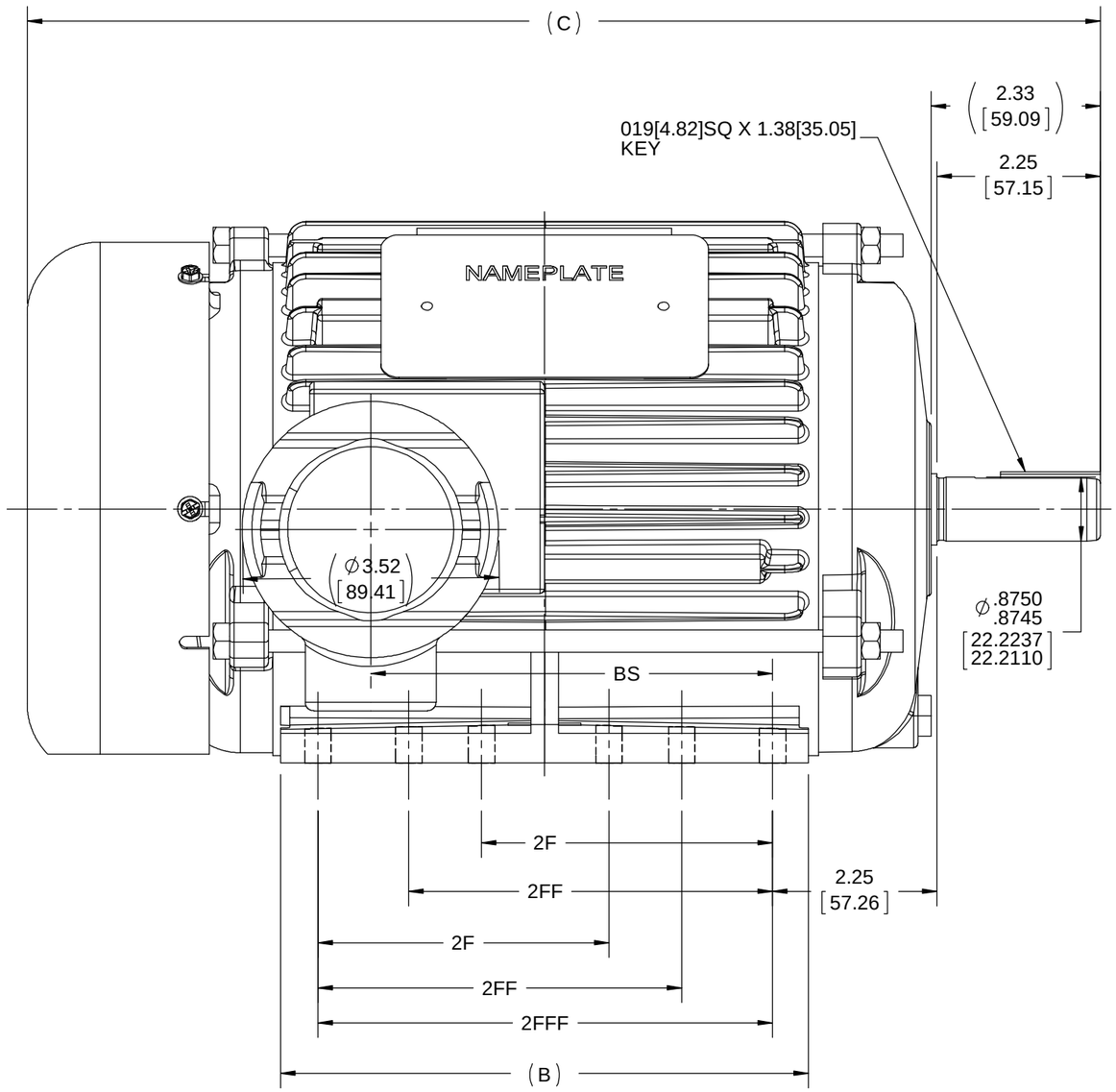

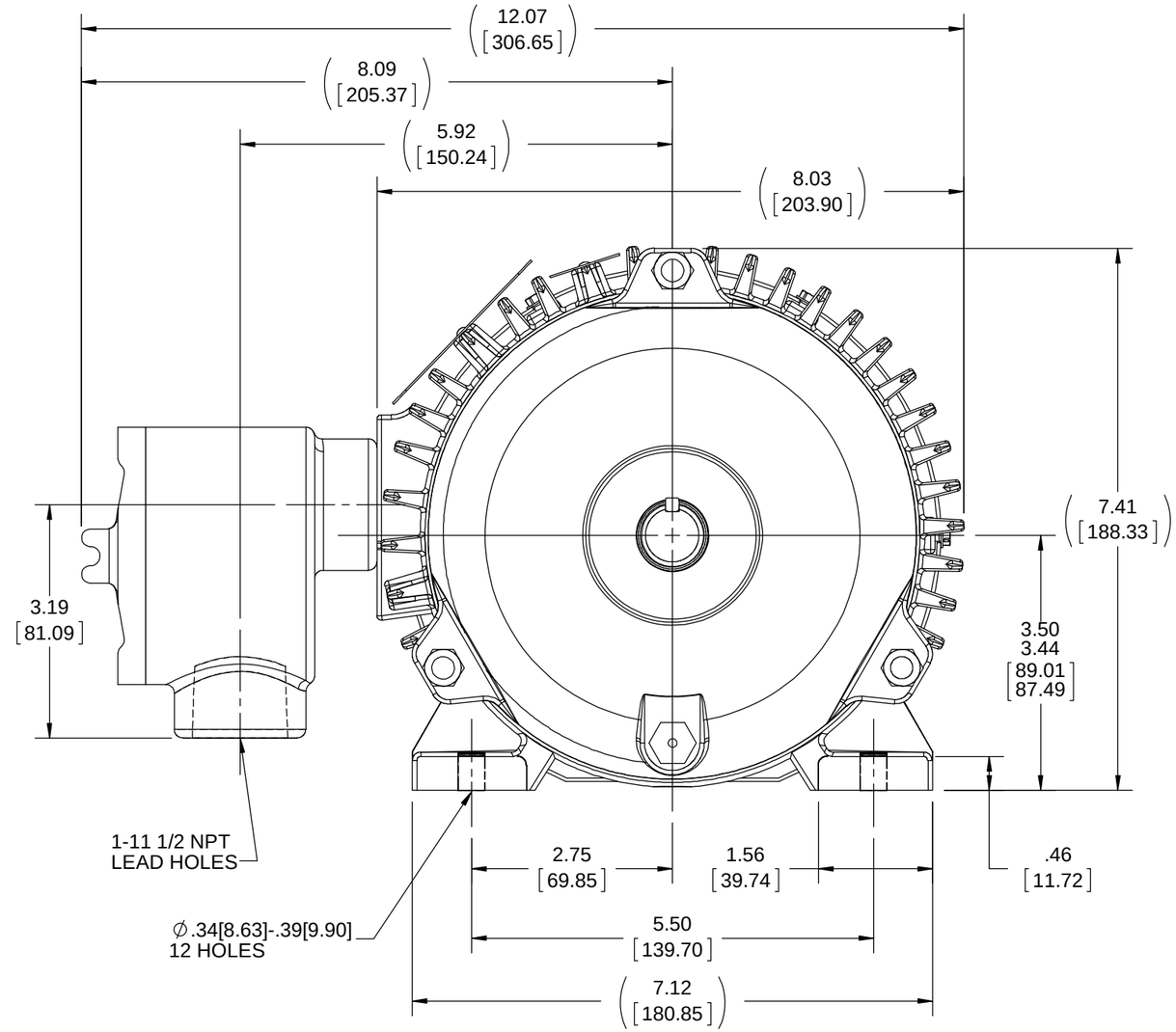

DASH	FR.	C	B	BS	2F	2FF	2FFF
750	143/5	14.75[374.56]	7.25[184.15]	5.53[140.34]	4.00[101.60]	5.00[127.00]	6.25[158.75]

NOTE:
1. BOX CAN ONLY BE ROTATED CLOCKWISE UP TO 270 ˚ FROM ITS ORIGINAL POSITION.
2. READ NAMEPLATES FROM C'BOX SIDE OF MOTOR

DRAWING REVISION	REVISION BY	DATE
A		
ECO: ECO-0156724	APPROVED BY	DATE

ECO DESCRIPTION: OUTLINE CONVERSION PROJECT

COPYRIGHT REGAL BELOIT AMERICA, INC. ALL RIGHTS RESERVED.
PROPRIETARY AND CONFIDENTIAL INFORMATION - THIS DOCUMENT IS THE PROPERTY OF REGAL BELOIT AMERICA, INC. ("OWNER") AND CONTAINS OWNER'S PROPRIETARY INFORMATION. ANY PERSON, CORPORATION OR OTHER FIRM RECEIVING IT IS DEEMED, BY RECEIVING IT, TO AGREE THAT IT, AND/OR ANY PART OF IT, SHALL NOT BE DISCLOSED TO ANY PERSON, CORPORATION OR OTHER ENTITY, DUPLICATED, AND/OR USED, EXCEPT AS EXPRESSLY APPROVED IN WRITING IN ADVANCE BY OWNER. THIS DOCUMENT SHALL BE RETURNED TO OWNER UPON REQUEST. IT MAY BE SUBJECT TO CERTAIN RESTRICTIONS UNDER APPLICABLE EXPORT CONTROL LAWS AND REGULATIONS.

TOLERANCES UNLESS OTHERWISE SPECIFIED:

DEC.	INCH	mm	ANGLE
.X	±0.1	[±2.5]	±7' 30"
.XX	±0.03	[±0.76]	
.XXX	±0.005	[±0.127]	
.XXXX	±0.0005	[±0.0127]	

REMOVE BURRS & BREAK SHARP EDGES: .003/.015 [.076/.381] X 45 ˚
CORNER FILLETS: R.02 [.51]
MACHINED SURFACES: 200 INCH / 5.1 mm
mm SHOWN IN [BRACKETS]

DRAWN BY	R. ISLAVATH
DATE	10-10-2018
APPROVED BY	JD
DATE	11-16-2018
REFERENCE	105937
THIRD ANGLE PROJECTION	

Regal Beloit America, Inc.

DESCRIPTION: OUTLINE
140 FR. - EXP.PR. - (629 NEW DESIGN)

MATERIAL | PROCESS/FINISH

SIZE: B | DRAWING NUMBER: 108763 | SHEET: 1 OF 1