104197

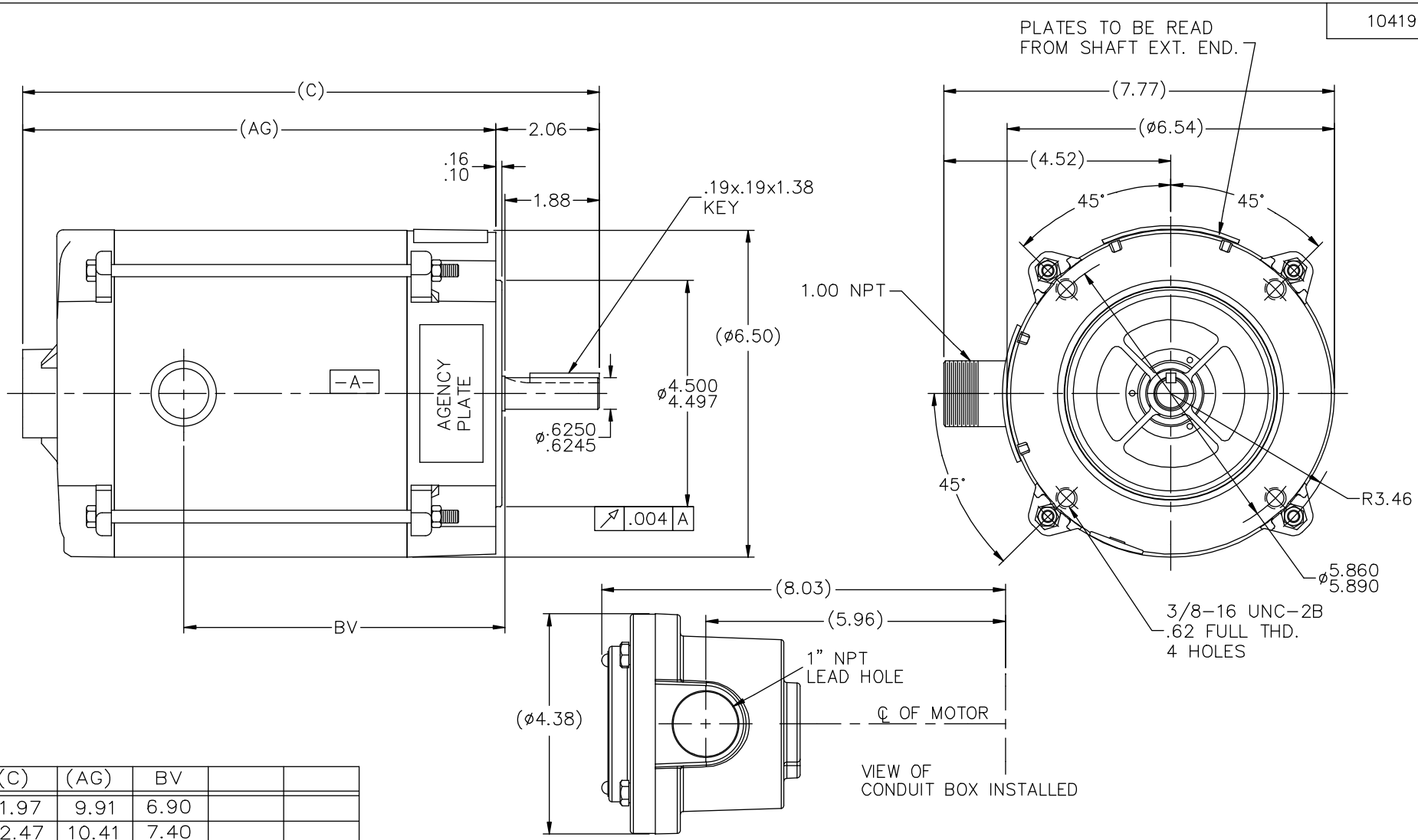

DASH	(C)	(AG)	BV		
631	11.97	9.91	6.90		
681	12.47	10.41	7.40		
731	12.97	10.91	7.90		
781	13.47	11.41	8.40		
831	13.97	11.91	8.90		
881	14.47	12.41	9.40		
931	14.97	12.91	9.90		
981	15.47	13.41	10.40		

NO.	REVISION	BY & DATE	CHK
7	CONDUIT BOX INSTALLED VIEW UPDATED	UD 10/08/13	ST
6	REVISED C'BOX PER CN40784A	JJB 02/23/2007	ML
5	ADDED DIMENSION ø5.860/5.890	RJW 06-29-2005	ML
4	REDRAWN IN AUTOCAD	TAT 06-28-2004	ML
3	ADDED CONDUIT BOX VIEW CN 26686	MRB 03-22-1999	
2	REMOVED "FLAT" FROM SHAFT EXT. CN 25600-292	MRB 07-21-1998	

TOLERANCES UNLESS SPECIFIED

DEC.	INCHES
.X	±.1
.XX	±.03
.XXX	±.005
.XXXX	±.0005
ANG	±7'30"

MARATHON ELECTRIC

TITLE OUTLINE – 'C' FACE
56 FR. – EXP. PR.

MAT'L.

FINISH

CAD FILE 104197

RFP

DIST WP

DRAWN MH 12-10-1996
CHK ML 01-13-1997
APPD GK 01-13-1997
SCALE 17=32
REF
FMF
PREV

SIZE B | DRAWING NO. 104197 | PAGE OF | REV. 7