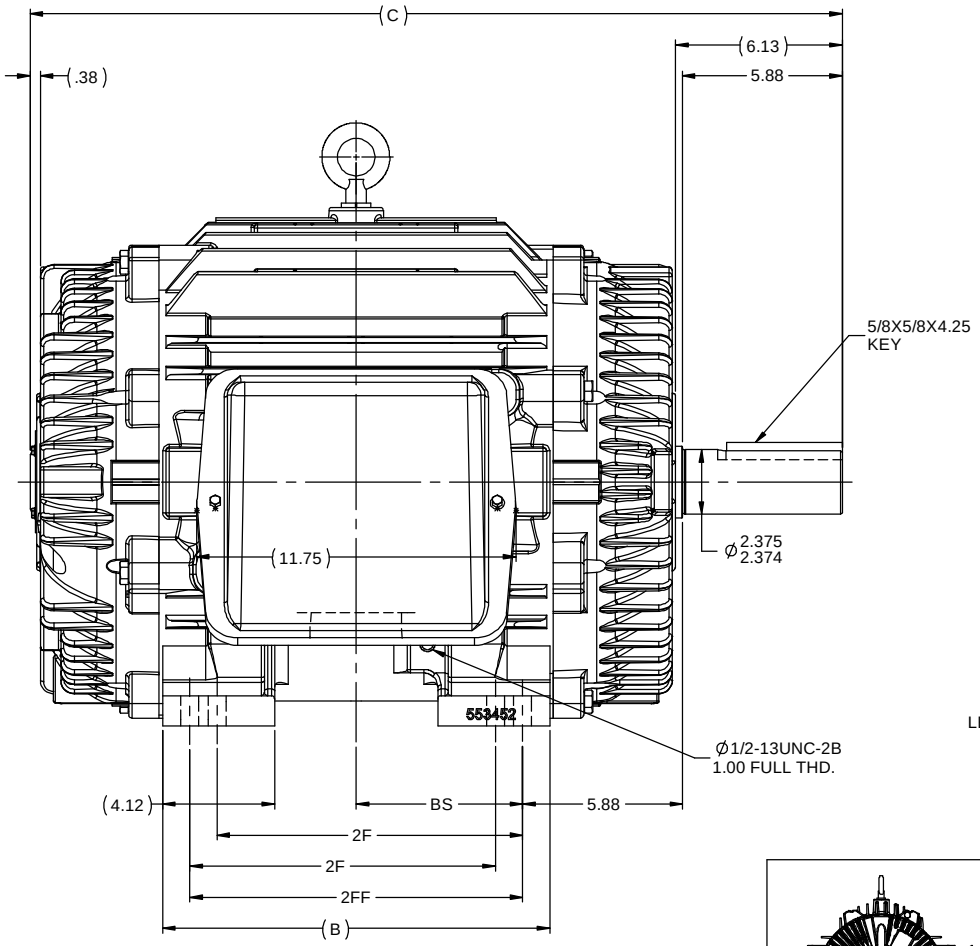

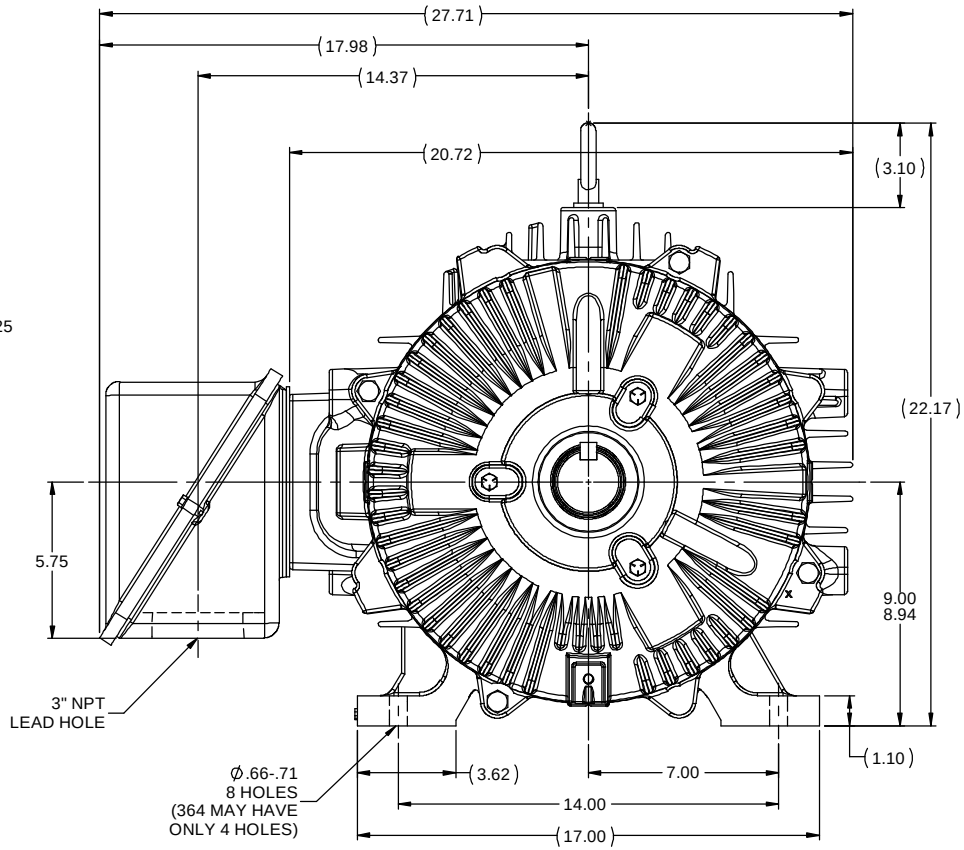

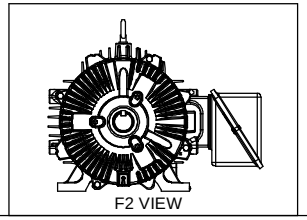

NOTES:
1. CONDUIT BOX CAN BE ROTATED IN 90 ° STEPS.
2. CONDUIT BOX CAN BE MOUNTED ON OPPOSITE SIDE BY REMOVING BRACKETS AND TURNING 180 °.
3. NAMEPLATES TO BE READ FROM CONDUIT BOX SIDE OF MOTOR.

DASH	FRAME	B	C	2F	2FF	BS
1350	364T	13.24	28.89	11.25	---	5.63
1450	364/365T	14.24	29.89	11.25	12.25	6.13

NO	REVISION	BY & DATE	CHK
1	UPDATED FRAME ISAAC 09-5049	EH 05-17-2012	MH

TOLERANCES UNLESS SPECIFIED

DEC	INCHES
.X	±.1
.XX	±.03
.XXX	±.005
.XXXX	±.0005
ANG	±7'30"

marathon electric

TITLE OUTLINE - NPT LEAD HOLE
360T FR - TEAO/TENV - W/SHAFT COVER

MAT'L
FINISH

DRAWN	JJB 10-02-2009
CHK	MH 10-02-2009
APPR	MJS 10-02-2009
SCALE	7:32
REF	
FMF	MU92634
PAGE	OF

THIRD ANGLE PROJECTION

RFP
PREV
NETWORK FILE NAME SS553779

SIZE B
DRAWING NO SS553779
REV 1

5/17/2012 3:02:40 PM - Converted by Connexus