104964

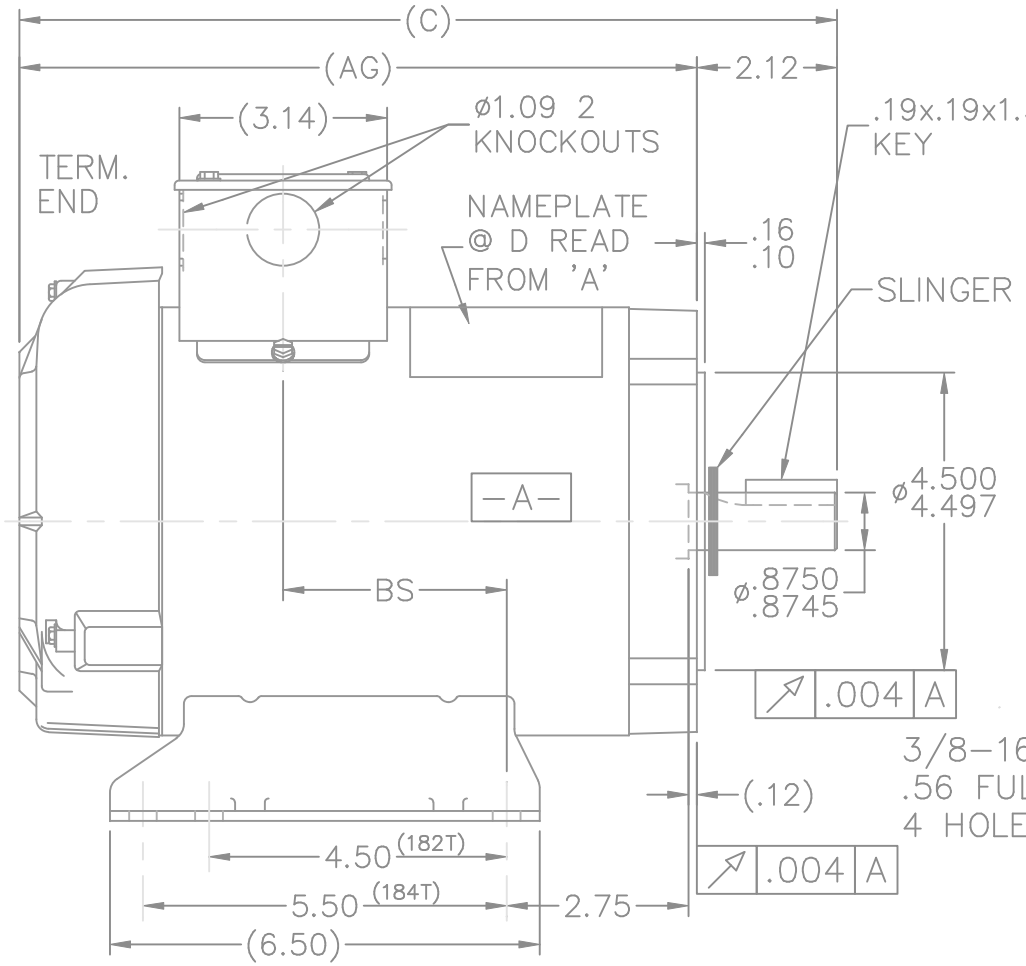

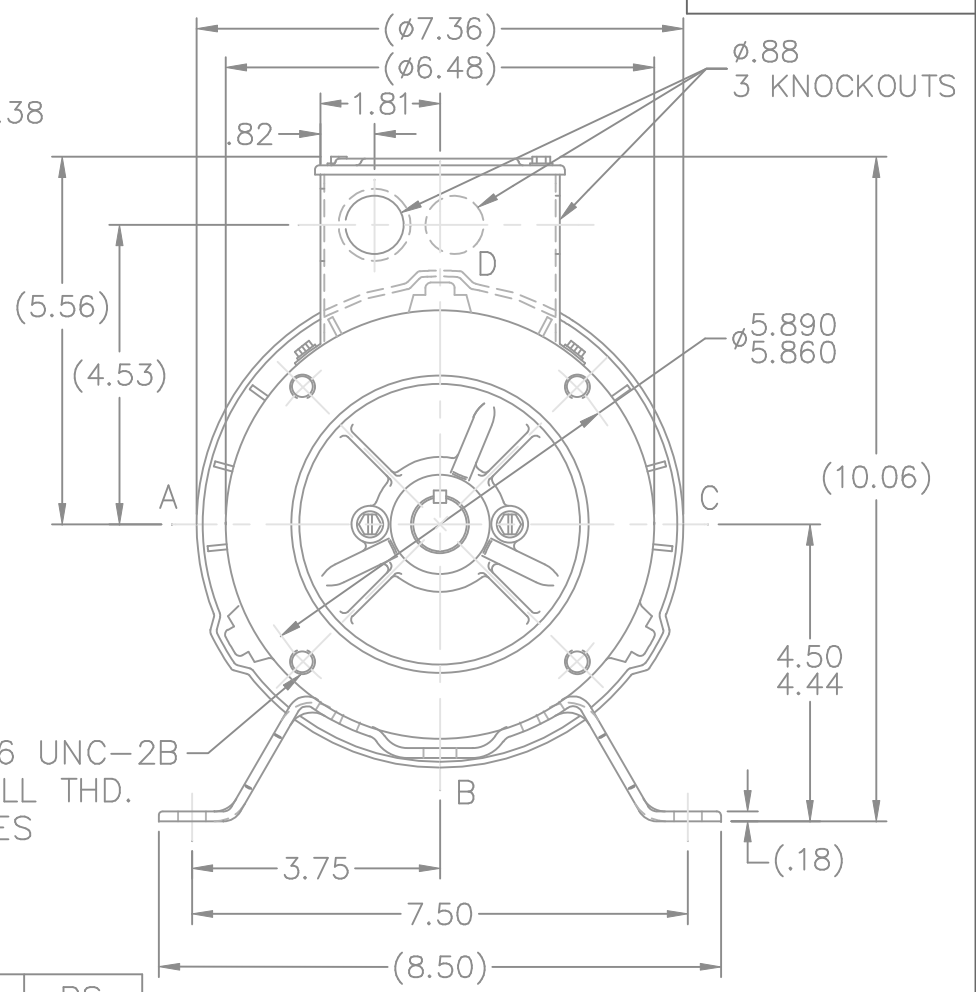

DASH	FRAME	C	AG	BS	DASH	FRAME	C	AG	BS
706	140T	12.37	10.25	3.38	856	140T	13.87	11.75	4.88
756	140T	12.87	10.75	3.88	906	140T	14.37	12.25	5.38
806	140T	13.37	11.25	4.38	956	140T	14.87	12.75	5.88

NOTE:
CONDUIT BOX CAN BE ROTATED
IN 180° STEPS

NO.	REVISION	BY & DATE	CHK
2	REDRAWN IN AUTOCAD	TAT 07-06-2004	ML
1	NEW DRAWING MU37416	MSG 05-30-2001	

TOLERANCES UNLESS SPECIFIED	
DEC.	INCHES
.X	±.1
.XX	±.03
.XXX	±.005
.XXXX	±.0005
ANG	±7'30"

MARATHON ELECTRIC

TITLE OUTLINE
140T FR.-TEFC-C' FACE-(180 MOUNTING)

MAT'L.

FINISH

CAD FILE 104964

RFP

DIST WP

DRAWN	MSG 05-21-2001
CHK	ML 05-30-2001
APPD	DN 05-30-2001
SCALE	11=32
REF	
FMF	
PREV	

SIZE	DRAWING NO.	PAGE OF	REV.
A	104964		2

9/27/2008 8:56:01 AM