028605

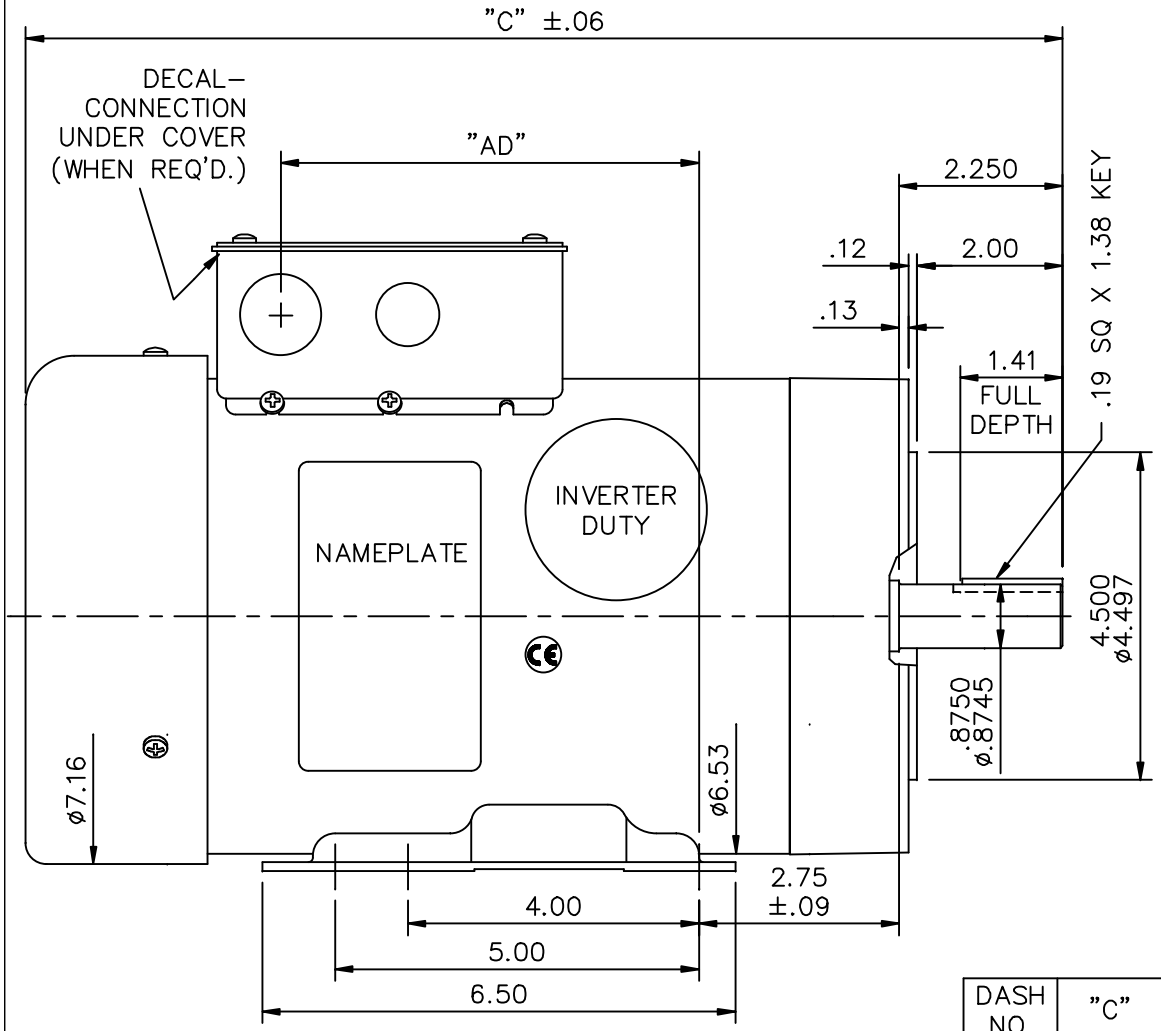

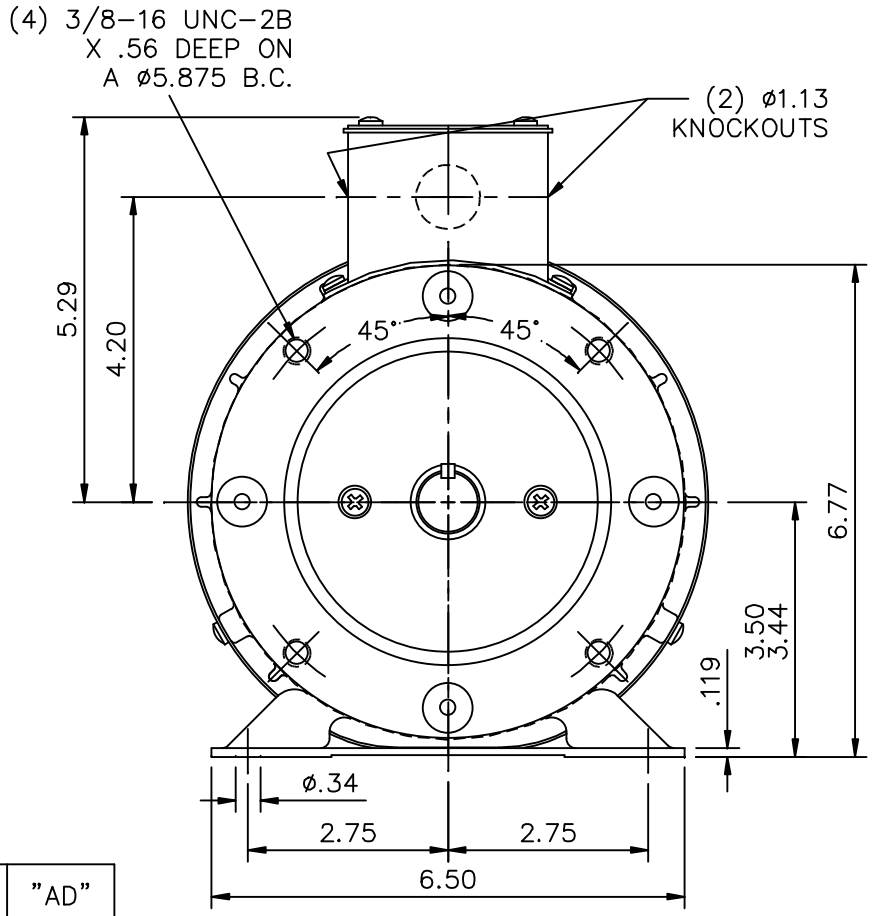

DASH NO.	"C"	"AD"
650	12.75	4.25
700	13.25	4.75
750	13.75	5.25
800	14.25	5.75

GASKETS THROUGHOUT
MAXIMUM FACE RUNOUT .004 T.I.R.
MAXIMUM PILOT ECCENTRICITY .004 T.I.R.
PERMISSIBLE SHAFT RUNOUT .002 T.I.R.

NO.	REVISION	BY & DATE	CHK
02	ADDED CE DECAL; ECR 89629	KLS 4/13/06	
01	REMOVED WATTSAVER DECAL	RLW 7/21/04	

TOLERANCES UNLESS SPECIFIED

DEC.	INCHES
.X	±.1
.XX	±.03
.XXX	±.005
.XXXX	±.0005
ANG	±1/2°

MARATHON ELECTRIC

TITLE: OUTLINE– 143/145TC FRAME TEFC– RIGID "C"

MAT'L.: GENERAL PURPOSE

FINISH

CAD FILE: 028605

RFP

DIST

DRAWN	LST 7/1/04
CHK	RW 7/1/04
APPD	KH 7/1/04
SCALE	3=8
REF	
FMF	
PREV	

SIZE: A

DRAWING NO.: 028605

REV.: 02