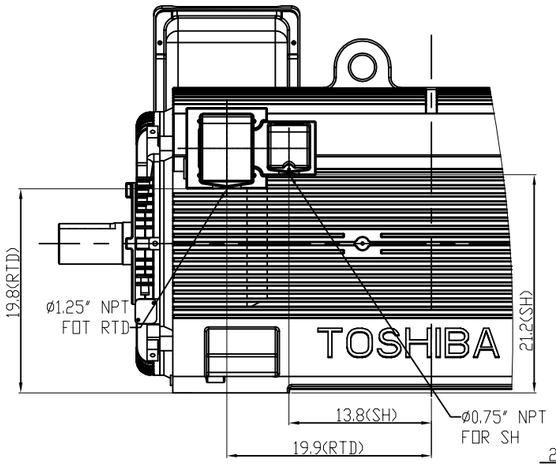

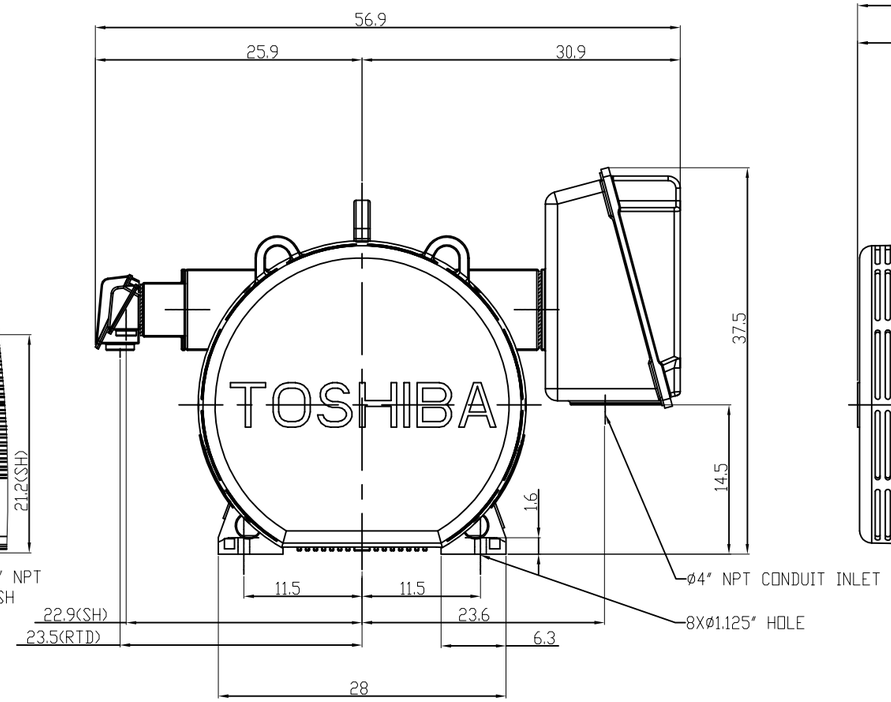

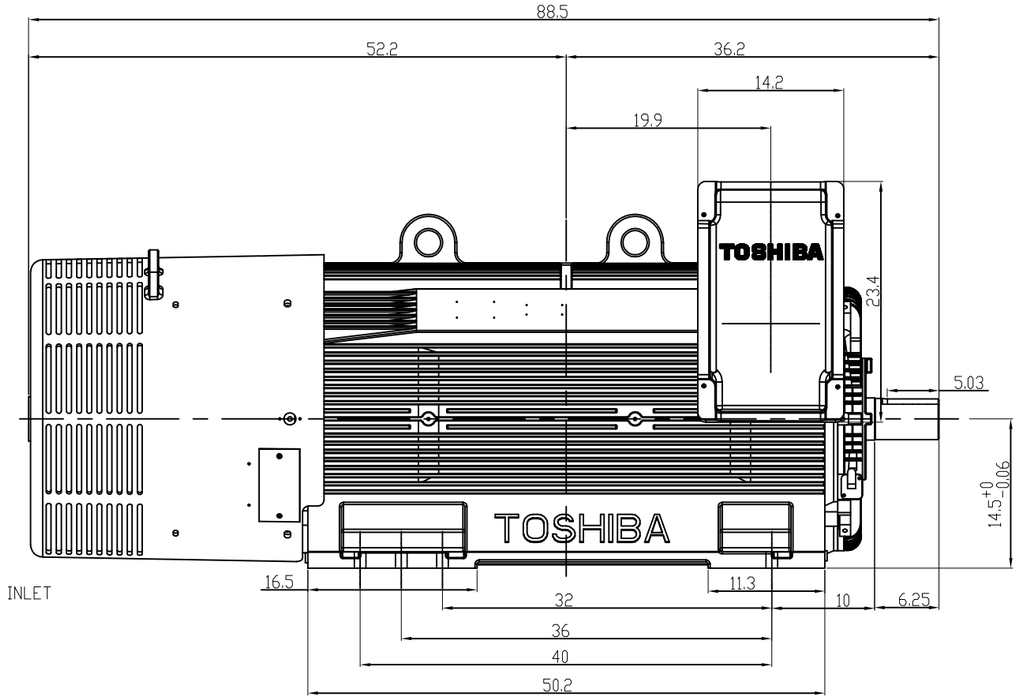

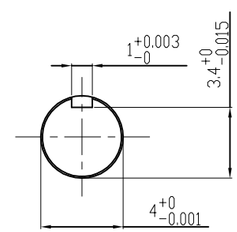

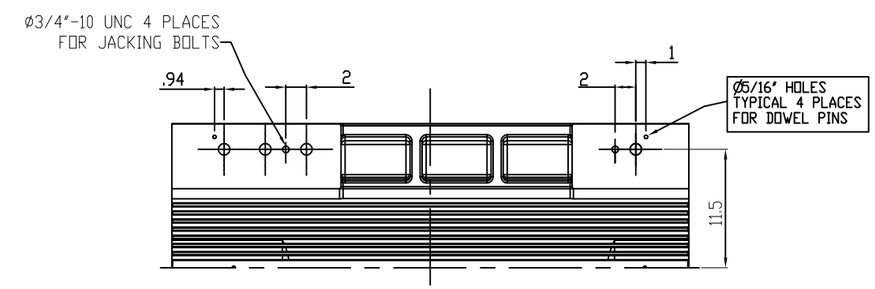

UNITS:INCHES

TECHNICAL INFORMATION

1. BEARING LUBRICATION DE: MOBIL POLYREX EM
   ODE: MOBIL POLYREX EM
2. BEARING TYPE DE: 6322C3
   ODE: 6322C3 INSULATED
3. WINDING TEMP. DETECTORS
   NUMBER AND TYPE: 6xRTD(Pt0°C–100ohm)
   LOCATION: IN STATOR SLOT
4. BEARING TEMP. DETECTORS
   NUMBER AND TYPE: _____
5. SPACE HEATER 1 PHASE
   VOLTS: 120 WATTS: 200
6. ROTATION: CCW VIEWED FROM NON DRIVE END
   THIS MOTOR IS BI DIRECTIONAL
7. MOTOR PAINT COLOR: GRAY
8. APPROX. WEIGHT: 7000 Lbs
9. ACCESORIES:

DRAWING LIST

MAIN TERMINAL BOX
130–7622–55

AUX TERMINAL BOX FOR	
SPACE HEATER	130–7520–50
R.T.D.	130–7522–51
THERMISTOR	N/A
PRODUCTION #	N/A

NO.	REVISION	BY	DATE
3	GRS FROM SRI, ADD DOWELS JACKING TO INLINE	RWS	1/6/14
2	ADD CI FANCOVER	BCS	4/24/07
1	ADD SH & RTD AUX BOX	BCS	9/13/06
0	FIRST ISSUE	BCS	8/2/06

MOTOR OUTLINE FOR
THREE PHASE INDUCTION MOTOR

CUSTOMER NAME	P.O. NO.	MOTOR TAG NO.

OUTPUT	POLE	VOLTAGE	FREQUENCY	FULL LOAD SPEED	TOSHIBA MODEL NO.
HP		V	Hz	(min^{-1})	

TYPE	FORM	INS. CLASS	RATING	FRAME	S.F.	ENCLOSURE
		F	CONT.	5811US		TEFC

TOSHIBA INTERNATIONAL CORPORATION
HOUSTON, TEXAS U.S.A.

3rd ANGLE PROJ.	PREPARED BY:	DATE:	CHECKED BY:	DATE:	DRAWING NO.:	REV.
	B SIDLE	8/2/06	D.LAJINESS	8/4/06	MDSL0071–18	3