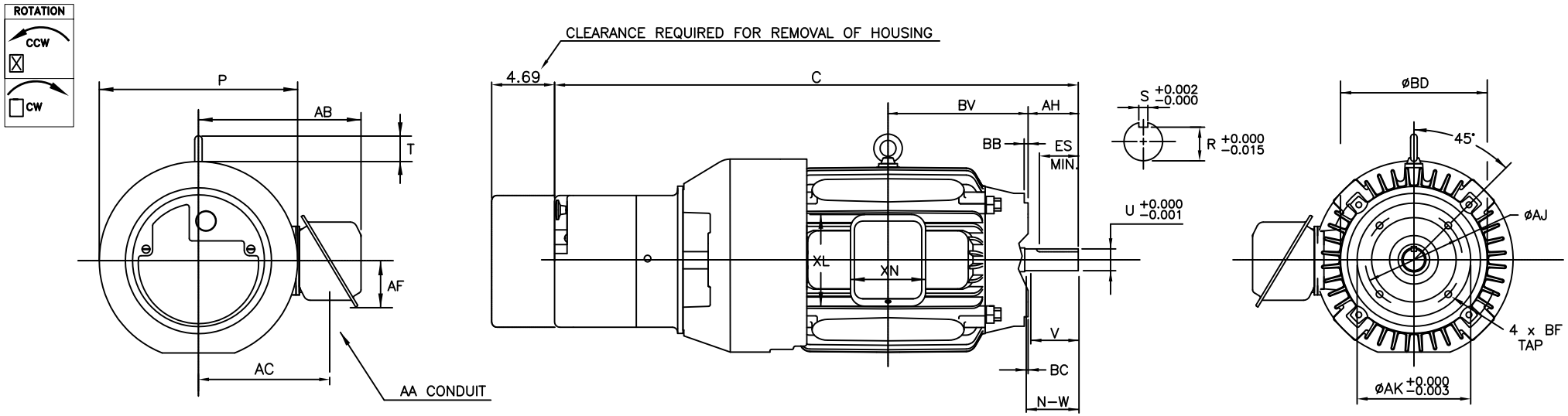

UNITS: INCHES

FRAME SIZE	FLANGE DIMENSIONS							
	AH	AJ	AK	BB	BC	BD	BF TAP	BV
254TC/256TC	3.75	7.250	8.500	0.29	0.25	10.00	1/2"–13UNC	10.45

FRAME SIZE	MOTOR DIMENSIONS											CONDUIT BOX						
	A	B	C	D	G	J	K	M	O	P	T	AA	AB	AC	AE	AF	XL	XN
254TC/256TC	–	–	39.0	–	–	–	–	–	–	14.8	1.9	1.25	12.1	9.8	–	3.0	6.8	5.6

FRAME SIZE	MOUNTING				SHAFT EXTENSION			KEY SEAT			BEARINGS		MAXIMUM WEIGHT
	E	2F	H	BA	N–W	V	U	R	S	ES	LS	OS	
254TC/256TC	–	–	–	–	4.00	3.75	1.625	1.416	0.375	2.88	6309C3	6308C3	380 lbs.

NOTES:
1. DIMENSION V REPRESENTS LENGTH OF STRAIGHT PART OF SHAFT
2. MAIN CONDUIT BOX MAY BE ROTATED IN 90° INCREMENTS
3. KEY DIMENSIONS EQUAL S x S x 2.88 (MOTOR SUPPLIED WITH KEY)
4. MOTOR WEIGHT SHOWN IS MAXIMUM HORSEPOWER IN FRAME
5. STANDARD PRODUCT USE BI–DIRECTIONAL FAN. OPPOSITE ROTATION AVAILABLE ONLY BY CONNECTION CHANGE

CUSTOMER: _____ MOTOR MODEL NO.: _____

P.O. NO.: _____ HP: _____ VOLTAGE: _____ RPM(SYN.): _____ Hz: _____

FRAME SIZE: _____ PRODUCT TYPE: TEFC EQP III, EPACT, & HIGH EFFICIENCY BRAKE SERIES

COMMENTS: 87,000 SERIES STEARNS BRAKE

PER: _____ DATE: _____

TAG NO's.:
–
–

- [x] STANDARD (NO AUX. BOXES)
- [ ] RTD AUX. BOX
- [ ] SPACE HEATER AUX. BOX
- [ ] BEARING RTD's

TOSHIBA RESERVES THE RIGHT TO MAKE CHANGES OF TECHNICAL IMPROVEMENT AND THE DATA MAY CHANGE WITHOUT NOTICE [x] PRELIMINARY

DO NOT USE FOR CONSTRUCTION, INSTALLATION, OR APPLICATION PURPOSES UNLESS THE DRAWING IS MARKED AS CERTIFIED [ ] CERTIFIED

TOSHIBA

TOSHIBA INTERNATIONAL CORPORATION

TOTALLY–ENCLOSED FAN–COOLED
ROUND–BODY
3 PHASE INDUCTION MOTOR W/ BRAKE
F1 ASSEMBLY

XT SERIES

VISIT OUR WEBSITE AT:
www.toshiba.com/ind