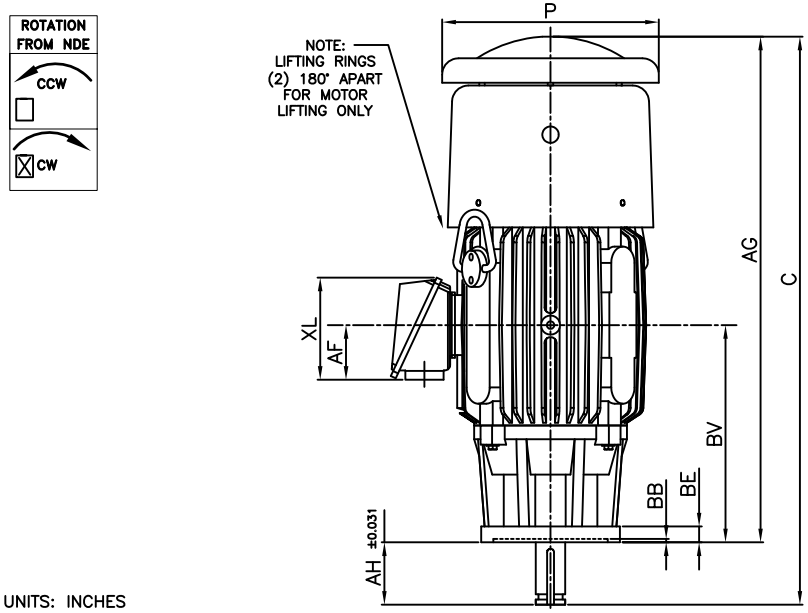

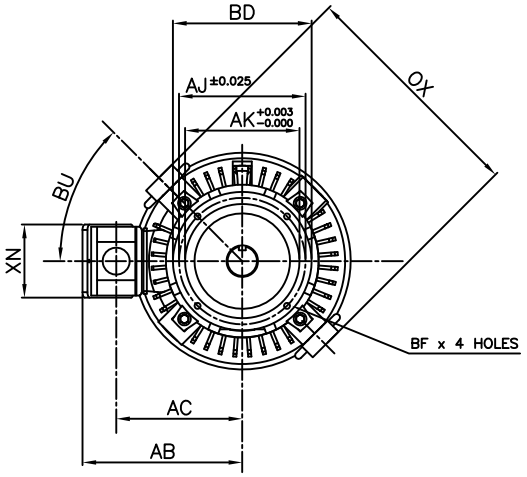

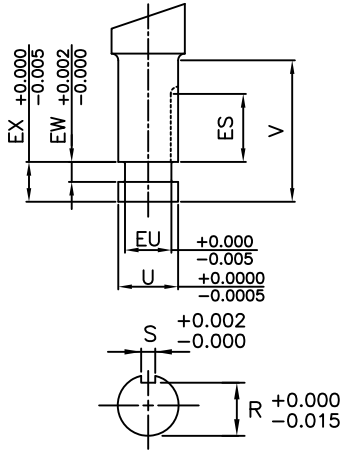

UNITS: INCHES

FRAME SIZE	MOTOR DIMENSIONS					P–FLANGE DIMENSIONS							SHAFT EXTENSION DIMENSIONS								
	AG	C	P	OX	BU	BB	BE	BF	BD	BV	AK	AJ	AH	EU	U	V	R	S	ES	EW	EX
250HP10	36.5	39.3	15.7	17.1	45°	0.25	1.0	0.44	10.0	15.7	8.25	9.125	2.75	0.875	1.125	2.75	0.986	0.25	1.28	0.375	0.75
250HP12	36.5	39.3	15.7	17.1	45°	0.25	1.0	0.44	12.0	15.7	8.25	9.125	2.75	0.875	1.125	2.75	0.986	0.25	1.28	0.375	0.75
250LP10	36.5	39.3	15.7	17.1	45°	0.25	1.0	0.44	10.0	15.7	8.25	9.125	2.75	1.250	1.625	2.75	1.416	0.375	1.28	0.375	0.75
250LP12	36.5	39.3	15.7	17.1	45°	0.25	1.0	0.44	12.0	15.7	8.25	9.125	2.75	1.250	1.625	2.75	1.416	0.375	1.28	0.375	0.75
280HP10	36.5	39.3	15.7	17.1	45°	0.25	1.0	0.44	10.0	15.7	8.25	9.125	2.75	0.875	1.125	2.75	0.986	0.25	1.28	0.375	0.75
280HP12	36.5	39.3	15.7	17.1	45°	0.25	1.0	0.44	12.0	15.7	8.25	9.125	2.75	0.875	1.125	2.75	0.986	0.25	1.28	0.375	0.75
280LP10	36.5	41.0	15.7	17.1	45°	0.25	1.0	0.44	10.0	15.7	8.25	9.125	4.50	1.750	2.125	4.50	1.845	0.50	3.03	0.375	0.75
280LP12	36.5	41.0	15.7	17.1	45°	0.25	1.0	0.44	12.0	15.7	8.25	9.125	4.50	1.750	2.125	4.50	1.845	0.50	3.03	0.375	0.75
280HPH10	36.5	41.0	15.7	17.1	45°	0.25	1.0	0.44	10.0	15.7	8.25	9.125	4.50	1.250	1.625	4.50	1.416	0.375	3.03	0.375	0.75
280LPA10	36.5	41.0	15.7	17.1	45°	0.25	1.0	0.44	10.0	15.7	8.25	9.125	4.50	1.250	1.625	4.50	1.416	0.375	1.28	0.375	0.75
280HPH12	36.5	41.0	15.7	17.1	45°	0.25	1.0	0.44	12.0	15.7	8.25	9.125	4.50	1.250	1.625	4.50	1.416	0.375	3.03	0.375	0.75
280LPA12	36.5	41.0	15.7	17.1	45°	0.25	1.0	0.44	12.0	15.7	8.25	9.125	4.50	1.250	1.625	4.50	1.416	0.375	1.28	0.375	0.75
280HP16	36.5	41.0	15.7	17.1	45°	0.25	1.0	0.69	16.5	15.7	13.50	14.75	4.50	1.750	2.125	4.50	1.845	0.50	3.03	0.375	0.75
280LPH16	36.5	41.0	15.7	17.1	45°	0.25	1.0	0.69	16.5	15.7	13.50	14.75	4.50	1.750	2.125	4.50	1.845	0.50	3.03	0.375	0.75
280HPH16	36.5	41.0	15.7	17.1	45°	0.25	1.0	0.69	16.5	15.7	13.50	14.75	4.50	1.250	1.625	4.50	1.416	0.375	3.03	0.375	0.75
280LPA16	36.5	41.0	15.7	17.1	45°	0.25	1.0	0.69	16.5	15.7	13.50	14.75	4.50	1.250	1.625	4.50	1.416	0.375	1.28	0.375	0.75

NOTES:
1. DIMENSION V REPRESENTS LENGTH OF STRAIGHT PART OF SHAFT
2. MAIN CONDUIT BOX MAY BE ROTATED IN 90° INCREMENTS
3. KEY DIMENSIONS EQUAL S x S x ES (MOTOR SUPPLIED WITH KEY)
4. MOTOR WEIGHT SHOWN IS MAXIMUM HORSEPOWER IN FRAME
5. STANDARD PRODUCT USE BI–DIRECTIONAL FAN. OPPOSITE ROTATION AVAILABLE ONLY BY CONNECTION CHANGE

CONDUIT BOX DIMENSIONS						MAXIMUM WEIGHT
AA NPT	AB	AC	AF	XL	XN	
1.50	10.7	8.3	4.0	7.4	5.3	500 lbs.

FRAME SIZE	BEARINGS	
	LS	OS
250HP	6309C3	6310C3
250LP	6309C3	7309BEGAM x 2
280HP	6309C3	6310C3
280LP	6312C3	7309BEGAM x 2

CUSTOMER: _____ MOTOR MODEL NO.: _____

P.O. NO.: _____ HP: _____ VOLTAGE: _____ RPM(SYN.): _____ Hz: _____

FRAME SIZE: _____ PRODUCT TYPE: VERTICAL SOLID SHAFT ROUND BODY P–FLANGE

COMMENTS: _____

PER: _____ DATE: _____

TAG NO's.:

- [X] STANDARD (NO AUX. BOXES)
- [ ] RTD AUX. BOX
- [ ] SPACE HEATER AUX. BOX
- [ ] BEARING RTD's

TOSHIBA RESERVES THE RIGHT TO MAKE CHANGES OF TECHNICAL IMPROVEMENT AND THE DATA MAY CHANGE WITHOUT NOTICE [X] PRELIMINARY

DO NOT USE FOR CONSTRUCTION, INSTALLATION, OR APPLICATION PURPOSES UNLESS THE DRAWING IS MARKED AS CERTIFIED [ ] CERTIFIED

TOSHIBA

TOSHIBA INTERNATIONAL CORPORATION

TOTALLY–ENCLOSED FAN–COOLED
VERTICAL SOLID SHAFT ROUNDBODY P–FLANGE
3 PHASE INDUCTION MOTOR
F1 ASSEMBLY

XT SERIES

VISIT OUR WEBSITE AT:
www.toshiba.com/ind

MDSL0151–04 R06