HYUNDAI HEAVY INDUSTRIES CO., LTD.	TEFC THREE PHASE INDUCTION MOTOR	TYPE	XLP, XJP CAST IRON FRAME

FRAME SIZE	OUTPUT(HP)	POLES	Hz	TIME RATING

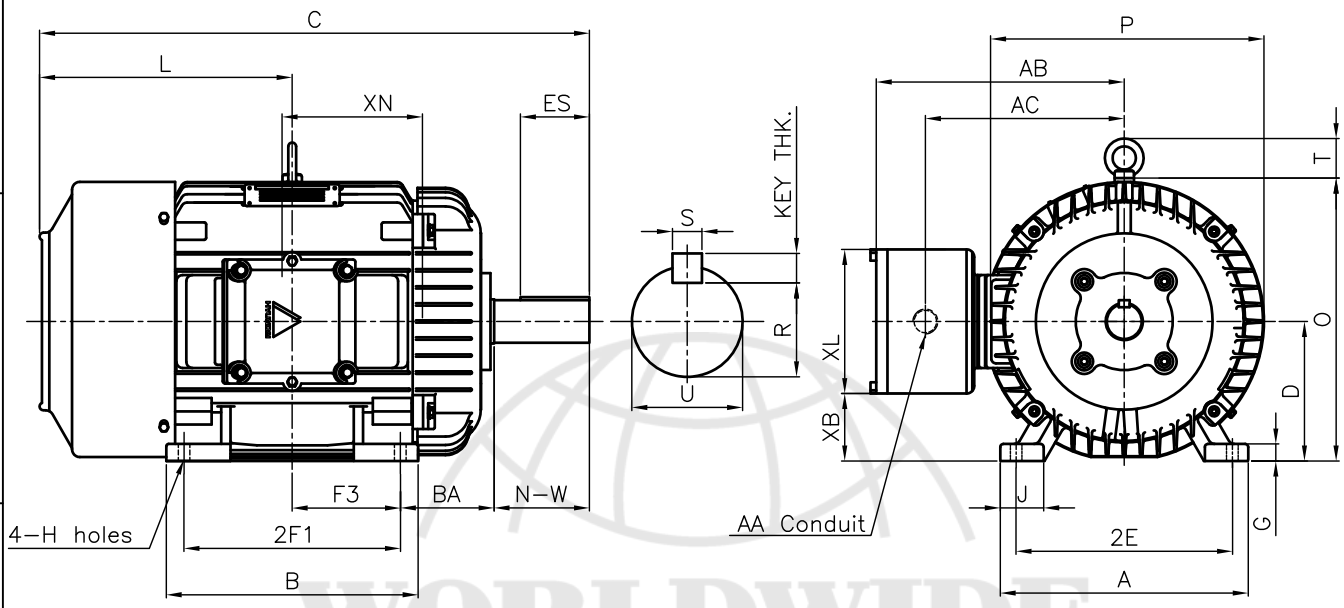

DIMENSIONS

MOUNTING									CONDUIT BOX						APPROX. WGT.(LB)
A	B	2E	2F1	2F2	F3	G	J	H	AA	AB	AC	XB	XL	XN	286T
12.60	12.68	11.00	11.00	–	5.50	0.78	2.20	0.53	1.50	12.60	10.10	3.94	6.30	7.32	480

OVERALL							SHAFT					KEY THK.	BEARING	
BA	C	D	L	O	P	T	U	N–W	KEYWAY				DRIVE END	OPP. DRIVE END
									R	ES	S			
4.75	27.71	7.00	12.84	14.28	14.19	2.01	1.875	4.62	1.591	3.28	0.500	0.500	6310ZC3	6310ZC3

NOTE

1. Dimension "D" tolerance : +0.00inch – 0.03inch
2. Dimension "U" tolerance : +0.000inch – 0.001inch
3. Dimension "R" tolerance : +0.000inch – 0.015inch

APPD BY	J. H. KIM	UNIT	INCH	SUBJECT	NEMA 286T	CAD PROJ \ FILE XSMOUTN\A1110AA
CHKD BY	K. S. LEE	SCALE	1/10	TITLE	OUTLINE	
CHKD BY		PROJEC'N	3rd Angle			
DSND BY	KIM IN KYU	DATE	2010.12.31			
HYUNDAI HEAVY INDUSTRIES CO., LTD. Electro–Electric System Division				REF. NO	A1110AA	Sheet No. of
				DWG NO	LM–U1286B3TL001	Revision No. 0