HYUNDAI HEAVY INDUSTRIES CO., LTD.

본 도면은 현대중공업(주) 재산이므로 허가없이 복사할 수 없음 (취급유의)

THIS DRAWING IS PROPRIETARY TO HHI. NO PART OF THIS DRAWING MAYBE REPRODUCED WITHOUT THE PERMISSION OF HHI.

HYUNDAI HEAVY INDUSTRIES CO., LTD.

TEFC

THREE PHASE INDUCTION MOTOR

TYPE	XKP,XIP
	Cast iron frame

FRAME SIZE	OUTPUT(HP)	POLES	Hz	TIME RATING
364TS			60	CONT

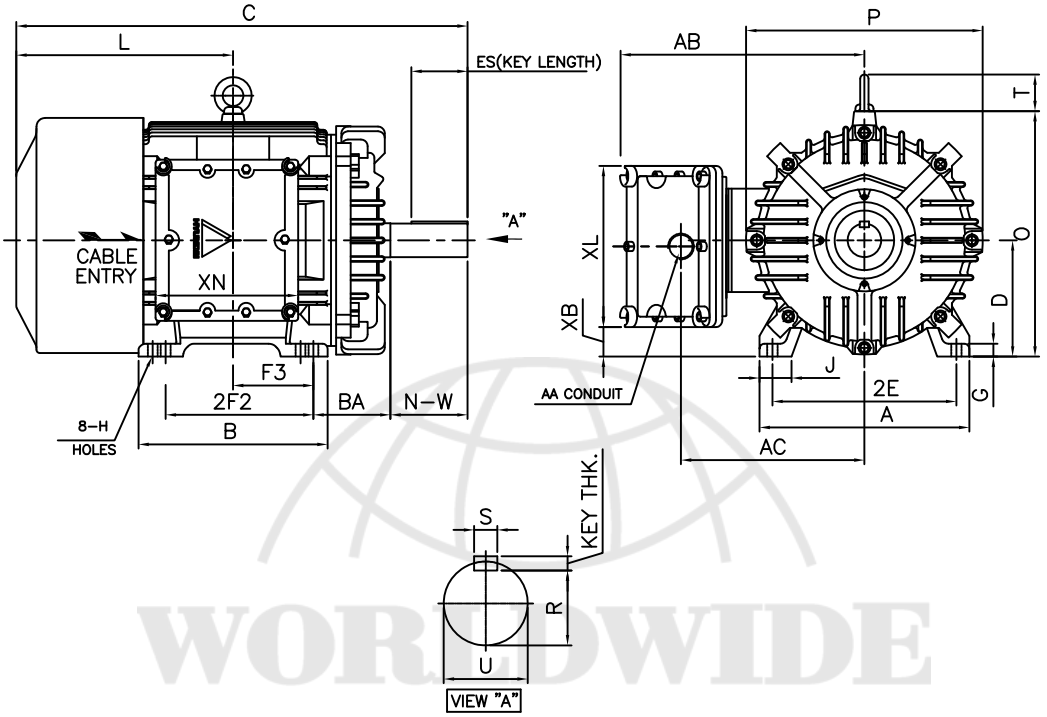

DIMENSIONS

MOUNTING									CONDUIT BOX						APPROX. WGT.(LB)
A	B	2E	2F1	2F2	F3	G	J	H	AA	AB	AC	XB	XL	XN	
15.98	14.41	14.00	–	11.25	6.122	0.98	2.44	0.66	3.00	18.89	14.37	2.24	12.28	10.86	2P: 1047 or 4P: 1113 or 6P: 1113

OVERALL							SHAFT					KEY	BEARING	
									KEYWAY					
BA	C	D	L	O	P	T	U	N–W	R	ES	S	THK.	DRIVE END	OPP. DRIVE END
5.88	34.01	9.00	16.51	18.70	18.03	2.80	1.875	3.75	1.591	2.03	0.500	0.500	6213C3	6213C3

NOTE

1. Dimension "D" tolerance : +0.00inch – 0.03inch (143T–365T) ; +0.000inch – 0.06inch (404T–449T)
2. Dimension "U" tolerance : +0.000inch – 0.005inch (143T–215T), +0.000inch – 0.001inch (254T–449T)
3. Dimension "R" tolerance : +0.000inch – 0.015inch

Q'TY	DESCRIPTION	MATERIAL	DIMENSION	WEIGHT	PART NO.	REMARK	NO.

APPD BY		UNIT	mm
CHKD BY		SCALE	1/15
CHKD BY		PROJEC'N	3각법(3rd Angle)
DSND BY	김종선	DATE	2012–02–15

SUBJECT: 364TS

DWG SIZE: A4 (1:15)

TITLE: Outline

HYUNDAI HEAVY INDUSTRIES CO., LTD.

REF. NO:

Sheet No. of

DWG NO: LM–U0364B3SL001

Revision No. 1