HYUNDAI HEAVY INDUSTRIES CO., LTD.

본 도면은 현대중공업(주) 재산이므로 허가없이 복사할 수 없음 (취급유의)

THIS DRAWING IS PROPRIETARY TO HHI. NO PART OF THIS DRAWING MAYBE REPRODUCED WITHOUT THE PERMISSION OF HHI.

HYUNDAI HEAVY INDUSTRIES CO., LTD.

TEFC

THREE PHASE INDUCTION MOTOR

TYPE	XKP,XIP
	Cast iron frame

FRAME SIZE	OUTPUT(HP)	POLES	Hz	TIME RATING
405T			60	CONT

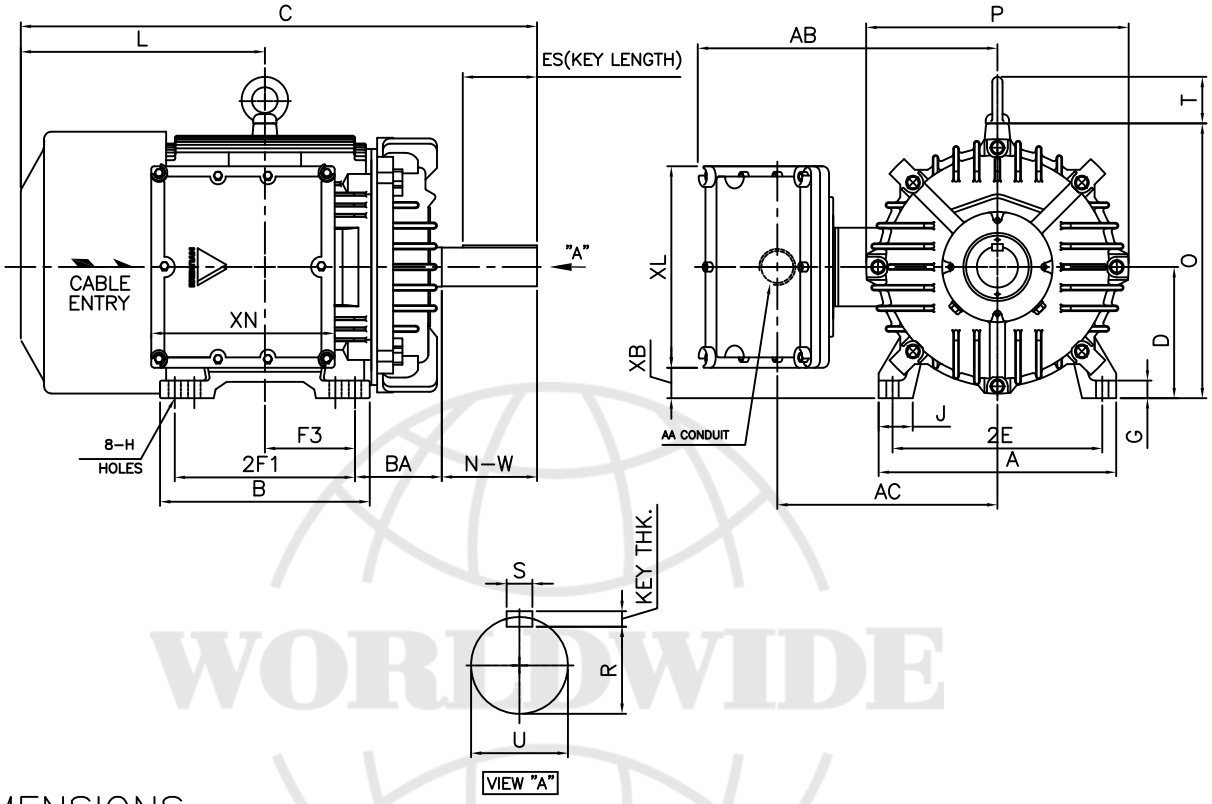

DIMENSIONS

MOUNTING									CONDUIT BOX						APPROX. WGT.(LB)
A	B	2E	2F1	2F2	F3	G	J	H	AA	AB	AC	XB	XL	XN	
18.11	15.98	16.00	13.75	–	6.870	1.18	2.59	0.81	3.00	22.83	17.32	2.16	15.35	13.97	2P: 1852 or 4P: 1830 or 6P: 1830

OVERALL							SHAFT					KEY	BEARING	
									KEYWAY					
BA	C	D	L	O	P	T	U	N-W	R	ES	S	THK.	DRIVE END	OPP. DRIVE END
6.62	39.33	10.00	18.60	20.94	20.00	3.55	2.875	7.25	2.450	5.65	0.750	0.750	NU316 or 6316C3	6313C3

NOTE

1. Dimension "D" tolerance : +0.00inch – 0.03inch (143T–365T) ; +0.000inch – 0.06inch (404T–449T)
2. Dimension "U" tolerance : +0.000inch – 0.005inch (143T–215T), +0.000inch – 0.001inch (254T–449T)
3. Dimension "R" tolerance : +0.000inch – 0.015inch

Q'TY	DESCRIPTION	MATERIAL	DIMENSION	WEIGHT	PART NO.	REMARK	NO.

APPD BY		UNIT	mm	SUBJECT	405T	DWG SIZE A4 (1:15)
CHKD BY		SCALE	1/15	TITLE	Outline	
CHKD BY		PROJEC'N	3각법(3rd Angle)			
DSND BY	김종선	DATE	2012-02-15			

HYUNDAI HEAVY INDUSTRIES CO., LTD.

REF. NO		Sheet No. of
DWG NO	LM-U0405B3TL001	Revision No. 1