HYUNDAI HEAVY INDUSTRIES CO., LTD.

본 도면은 현대중공업(주) 재산이므로 허가없이 복사할 수 없음 (취급유의)

THIS DRAWING IS PROPRIETARY TO HEECO. NO PART OF THIS DRAWING MAYBE REPRODUCED WITHOUT THE PERMISSION OF HHI.

HYUNDAI HEAVY INDUSTRIES CO., LTD.

IEEE841 TEFC

THREE PHASE INDUCTION MOTOR

TYPE	PLP
	Cast iron frame

FRAME SIZE	OUTPUT(HP)	POLES	Hz	TIME RATING
405TS			60	CONT

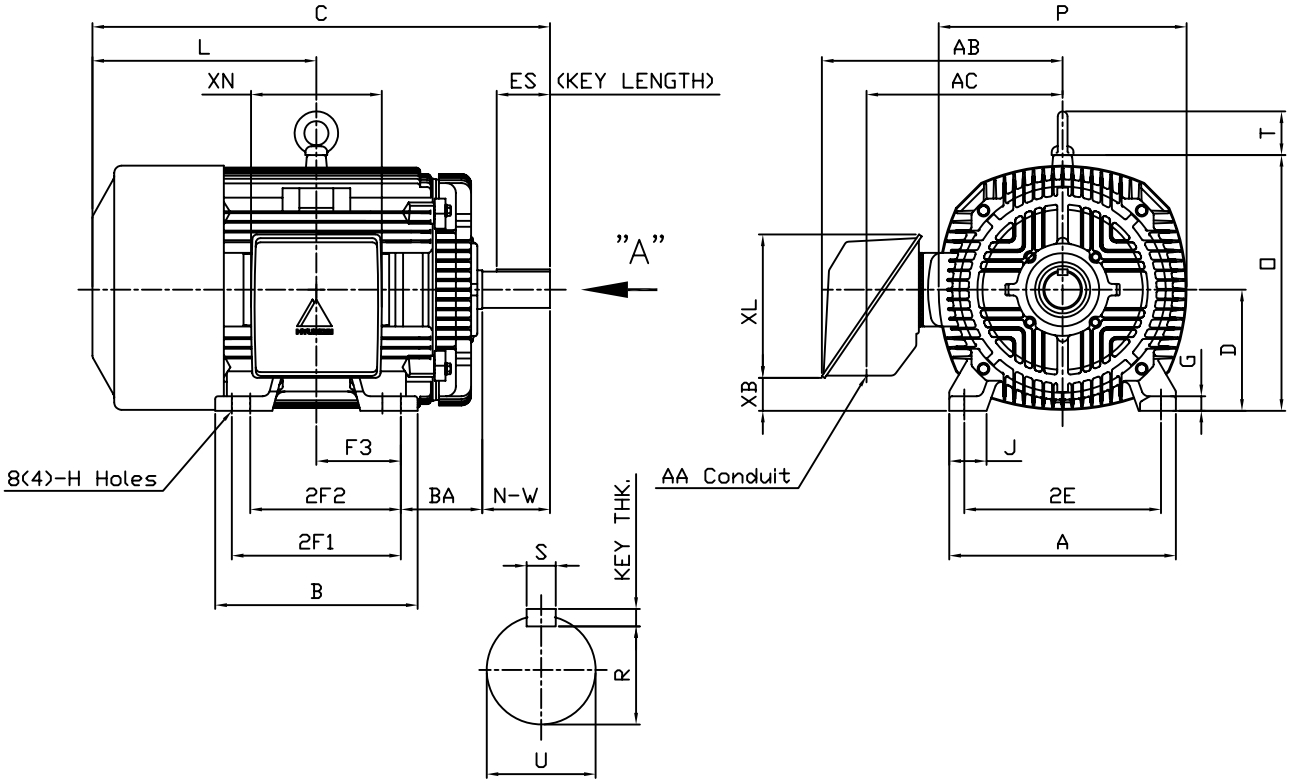

DIMENSIONS

VIEW "A"

MOUNTING									CONDUIT BOX						APPROX. WGT.(LB)
A	B	2E	2F1	2F2	F3	G	J	H	AA	AB	AC	XB	XL	XN	
18.43	16.46	16.00	13.75	(12.25)	6.870	1.18	3.03	0.81	3.00	20.28	14.85	2.83	11.65	10.63	1110

OVERALL							SHAFT					KEY	BEARING	
BA	C	D	L	O	P	T	U	N-W	KEYWAY			THK.	DRIVE END	OPP. DRIVE END
									R	ES	S			
6.62	38.00	10.00	20.57	20.79	20.16	3.55	2.125	4.25	1.845	2.80	0.500	0.500	6313C3	6313C3

NOTE

1. Dimension "D" tolerance : +0.00inch – 0.03inch (143T–365T) ; +0.000inch – 0.06inch (404T–449T)
2. Dimension "U" tolerance : +0.000inch – 0.005inch (143T–215T), +0.000inch – 0.001inch (254T–449T)
3. Dimension "R" tolerance : +0.000inch – 0.015inch

Q'TY	DESCRIPTION	MATERIAL	DIMENSION	WEIGHT	PART NO.	REMARK	NO.

APPD BY	K.J.KANG	UNIT	INCH
Q.P CHK	O.J.KIM	SCALE	N/S
CHKD BY	N.D.LEE	PROJEC'N	3 각법(3rd Angle)
DSND BY	A.L.SHIN	DATE	2011.03.31

SUBJECT	405TS	CAD PROJ 명 \ FILE 명 MMSTDMTR\A8116BA
TITLE	OUTLINE	
REF. NO	A8116BA	Sheet No. of
DWG NO	350A8116BA	Revision No. 0

HYUNDAI HEAVY INDUSTRIES CO., LTD.