HYUNDAI HEAVY INDUSTRIES CO., LTD.

본 도면은 현대중공업(주) 재산이므로 허가없이 복사할 수 없음 (취급유의)

THIS DRAWING IS PROPRIETARY TO HHI. NO PART OF THIS DRAWING MAYBE REPRODUCED WITHOUT THE PERMISSION OF HHI.

HYUNDAI HEAVY INDUSTRIES CO., LTD.

TEFC

THREE PHASE INDUCTION MOTOR

TYPE	LP, JP
	Cast iron frame

FRAME SIZE	OUTPUT(HP)	POLES	Hz	TIME RATING
447TC-F2			60	CONT

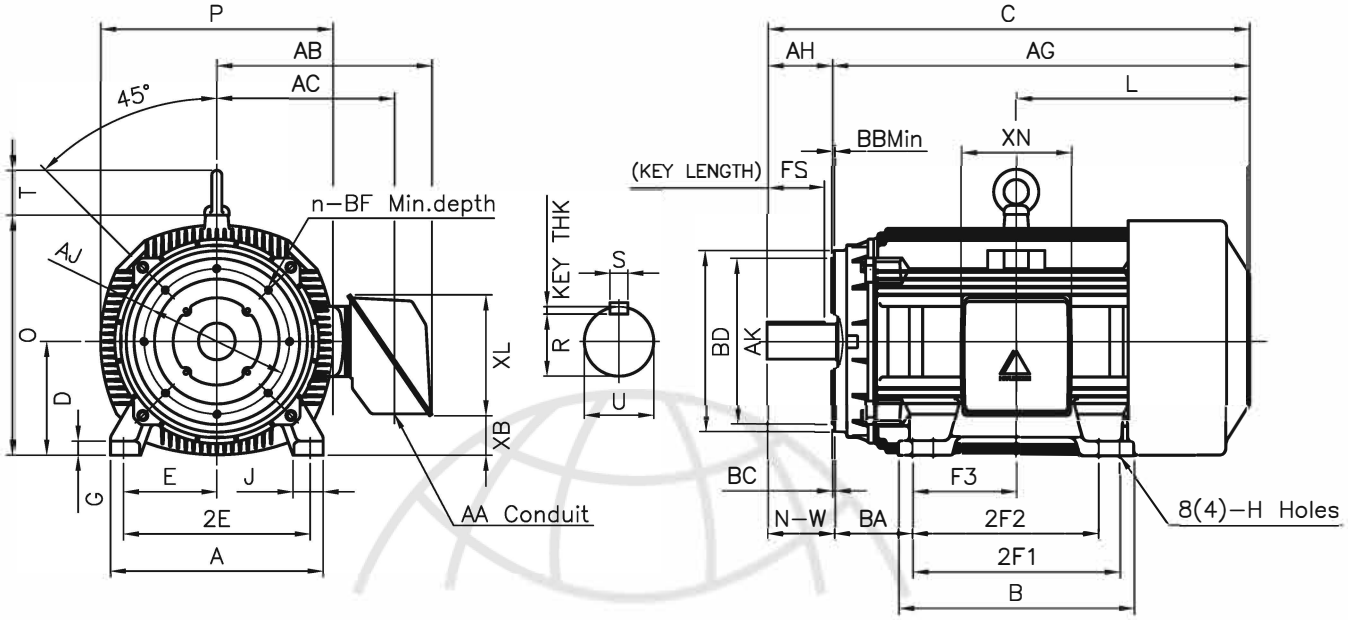

DIMENSIONS

MOUNTING									CONDUIT BOX						APPROX. WGT.(LB)
A	B	2E	2F1	2F2	F3	G	J	H	AA	AB	AC	XB	XL	XN	
20.51	22.72	18.00	20.00	(17.99)	10.000	1.42	3.07	0.81	3.00	21.26	18.03	3.83	11.65	10.63	1970

OVERALL								SHAFT					KEY	BEARING	
										KEYWAY					
BA	C	D	L	O	P	T	AG	U	N-W	R	ES	S	THK.	DRIVE END	OPP. DRIVE END
7.50	48.71	11.00	22.71	23.19	22.44	4.33	40.21	3.375	8.50	2.880	6.93	0.875	0.875	6318C3	6316C3

D-FLANGE								
AJ	AK	BB Min	BC	BD	BF	BF depth	n	AH
14.00	16.00	0.25	0.25	16.93	5/8-11	0.94	8	8.25

NOTE

1. Dimension "D" tolerance : +0.00inch ~ -0.03inch (143TC-365TC) : +0.000inch ~ -0.06inch (404TC-449TC)
2. Dimension "U" tolerance : +0.000inch ~ -0.0005inch (143TC-215TC): +0.000inch ~ -0.001inch (254TC-449TC)
3. Dimension "R" tolerance : +0.000inch ~ - 0.015inch
4. Dimension "AK" tolerance : +0.000inch ~ -0.003inch (143TC-286TC): +0.000inch ~ -0.005inch (324TC-449TC)

APPD BY	K.J. KANG	UNIT	INCH	SUBJECT	447TC	CAD PROJ \ FILE MMSTDMTR\A1319AA
CHKD BY		SCALE	N/S	TITLE	OUTLINE	
CHKD BY		PROJEC'N	3rd Angle			
DSND BY	N.D.LEE	DATE	2011.02.09			

HYUNDAI HEAVY INDUSTRIES CO., LTD.
Electro-Electric System Division

REF. NO	A1319AA	Sheet No. of
DWG NO	350A1319AA	Revision No. 0