HYUNDAI HEAVY INDUSTRIES CO., LTD.

본 도면은 현대중공업(주) 재산이므로 허가없이 복사할 수 없음 (취급유의)

THIS DRAWING IS PROPRIETARY TO HHI. NO PART OF THIS DRAWING MAYBE REPRODUCED WITHOUT THE PERMISSION OF HHI.

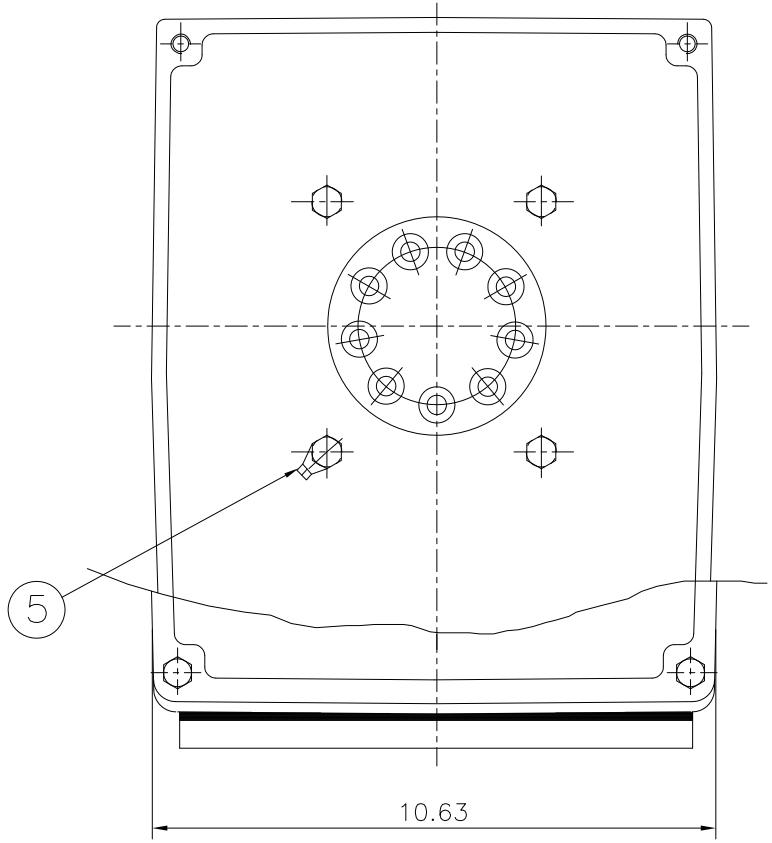

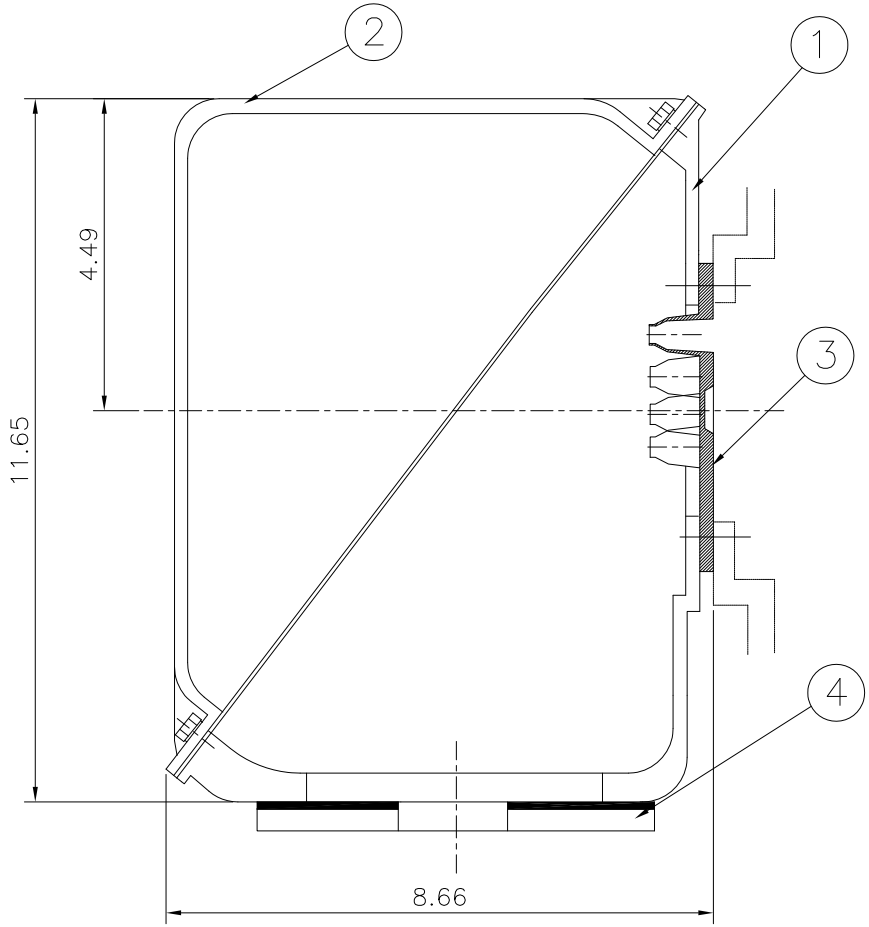

Q'TY	DESCRIPTION	MATERIAL	DIMENSION	WEIGHT	PART NO.	REMARK	NO.
1	EARTH TERMINAL LUG						5
1	CABLE ENTRY PLATE						4
1	GASKET	NBR					3
1	TERMINAL BOX COVER	CAST IRON					2
1	TERMINAL BOX BODY	CAST IRON					1

▽	50S
▽▽	12.5S
▽▽▽	3.2S
▽▽▽▽	0.4S

REV	DATE	CONTENTS	REVD BY	CHKD BY	CHKD BY	APPD BY

일반가공공차		일반제관공차	
1–4	±0.1	6–30	±0.5
4–18	±0.2	30–120	±0.8
18–63	±0.3	120–315	±1.2
63–250	±0.5	315–1000	±2.0
250–	±0.8	1000–	±3.0

APPD BY	KANG KYEONG JUNG	UNIT	INCH
CHKD BY	KIM JIN HONG	SCALE	Non Scale
CHKD BY	KIM OK JIN	PROJEC'N	3각법(3rd Angle)
DSND BY	KIM RYANG GYU	DATE	2011–10–21

HYUNDAI HEAVY INDUSTRIES CO., LTD.

SUBJECT: NEMA 400, 440

DWG SIZE: A3 (1:1)

TITLE: Main Terminal Box Assembly

REF. NO

Sheet No. of

DWG NO: 3M–016882

Revision No. 0