HYUNDAI HEAVY INDUSTRIES CO., LTD.

본 도면은 현대중공업(주) 재산이므로 허가없이 복사할 수 없음 (취급유의)

THIS DRAWING IS PROPRIETARY TO HHI. NO PART OF THIS DRAWING MAYBE REPRODUCED WITHOUT THE PERMISSION OF HHI.

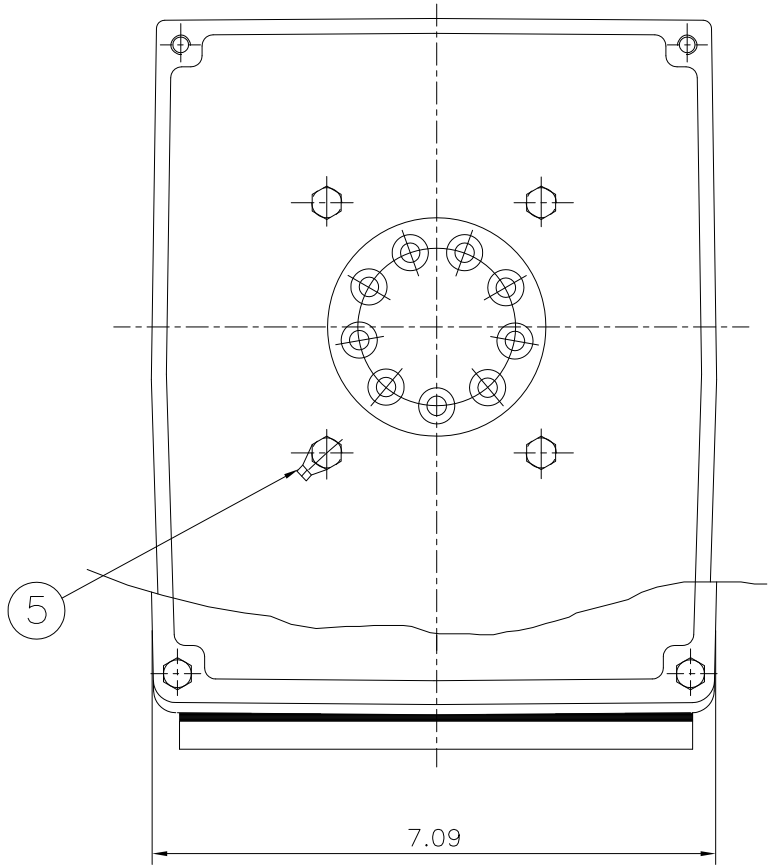

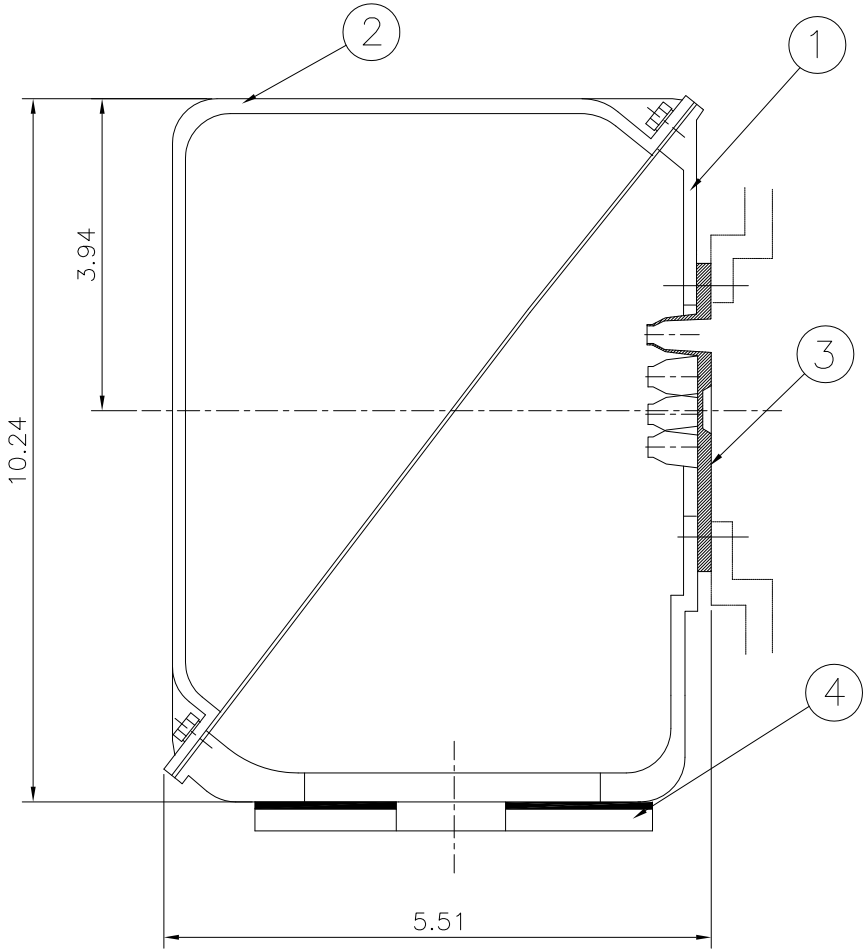

Q'TY	DESCRIPTION	MATERIAL	DIMENSION	WEIGHT	PART NO.	REMARK	NO.
1	EARTH TERMINAL LUG						5
1	CABLE ENTRY PLATE						4
1	GASKET	NBR					3
1	TERMINAL BOX COVER	CAST IRON					2
1	TERMINAL BOX BODY	CAST IRON					1

APPD BY	KANG KYEONG JUNG	UNIT	INCH
CHKD BY	KIM JIN HONG	SCALE	Non Scale
CHKD BY	KIM OK JIN	PROJEC'N	3각법(3rd Angle)
DSND BY	KIM RYANG GYU	DATE	2011-10-21

SUBJECT: NEMA 360

DWG SIZE: A3 (1:1)

TITLE: Main Terminal Box Assembly

HYUNDAI HEAVY INDUSTRIES CO., LTD.

REF. NO

Sheet No. of

DWG NO 3M-016881

Revision No. 0

▽	50S
▽▽	12.5S
▽▽▽	3.2S
▽▽▽▽	0.4S

REV	DATE	CONTENTS	REVD BY	CHKD BY	CHKD BY	APPD BY

일반가공공차		일반제관공차	
1-4	±0.1	6-30	±0.5
4-18	±0.2	30-120	±0.8
18-63	±0.3	120-315	±1.2
63-250	±0.5	315-1000	±2.0
250-	±0.8	1000-	±3.0