HYUNDAI HEAVY INDUSTRIES CO., LTD.

본 도면은 현대중공업(주) 재산이므로 허가없이 복사할 수 없음 (취급유의)

THIS DRAWING IS PROPRIETARY TO HEECO. NO PART OF THIS DRAWING MAYBE REPRODUCED WITHOUT THE PERMISSION OF HHI.

HYUNDAI HEAVY INDUSTRIES CO., LTD.

T E F C

THREE PHASE INDUCTION MOTOR

TYPE	LP, JP
	Cast iron frame

FRAME SIZE	OUTPUT(HP)	POLES	Hz	TIME RATING
444T			60	CONT

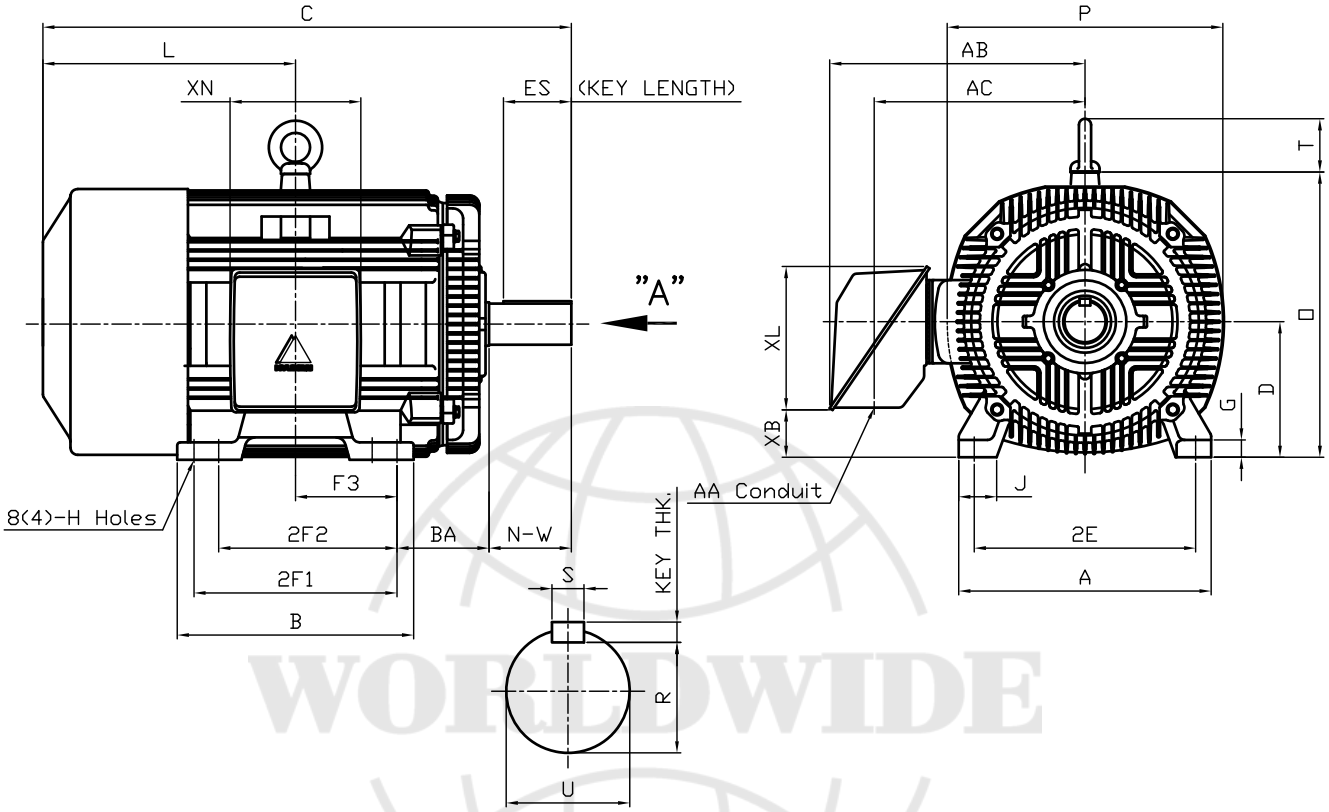

VIEW "A"

DIMENSIONS

MOUNTING									CONDUIT BOX						APPROX. WGT.(LB)
A	B	2E	2F1	2F2	F3	G	J	H	AA	AB	AC	XB	XL	XN	
20.51	19.21	18.00	(16.50)	14.50	8.248	1.42	3.07	0.81	3.00	21.26	18.03	3.83	11.65	10.63	1530

OVERALL							SHAFT					KEY	BEARING	
BA	C	D	L	O	P	T	U	N-W	KEYWAY R	KEYWAY ES	KEYWAY S	THK.	DRIVE END	OPP. DRIVE END
7.50	45.21	11.00	20.96	23.19	22.40	4.33	3.375	8.50	2.880	6.93	0.875	0.875	6318C3 or NU318	6316C3

NOTE

1. Dimension "D" tolerance : +0.00inch – 0.03inch (143T–365T) ; +0.000inch – 0.06inch (404T–449T)
2. Dimension "U" tolerance : +0.000inch – 0.005inch (143T–215T), +0.000inch – 0.001inch (254T–449T)
3. Dimension "R" tolerance : +0.000inch – 0.015inch

Q'TY	DESCRIPTION	MATERIAL	DIMENSION	WEIGHT	PART NO.	REMARK	NO.

APPD BY	K.J. Kang	UNIT	INCH
Q.P CHK		SCALE	N/S
CHKD BY		PROJEC'N	3 각법(3rd Angle)
DSND BY	N.D.Lee	DATE	2011.01.12

SUBJECT	444T	CAD PROJ 명 \ FILE 명 MMSTDMTR\A1117AA
TITLE	OUTLINE	
REF. NO	A1117AA	Sheet No. of
DWG NO	350A1117AA	Revision No. 0

HYUNDAI HEAVY INDUSTRIES CO., LTD.