Uncontrolled Copy

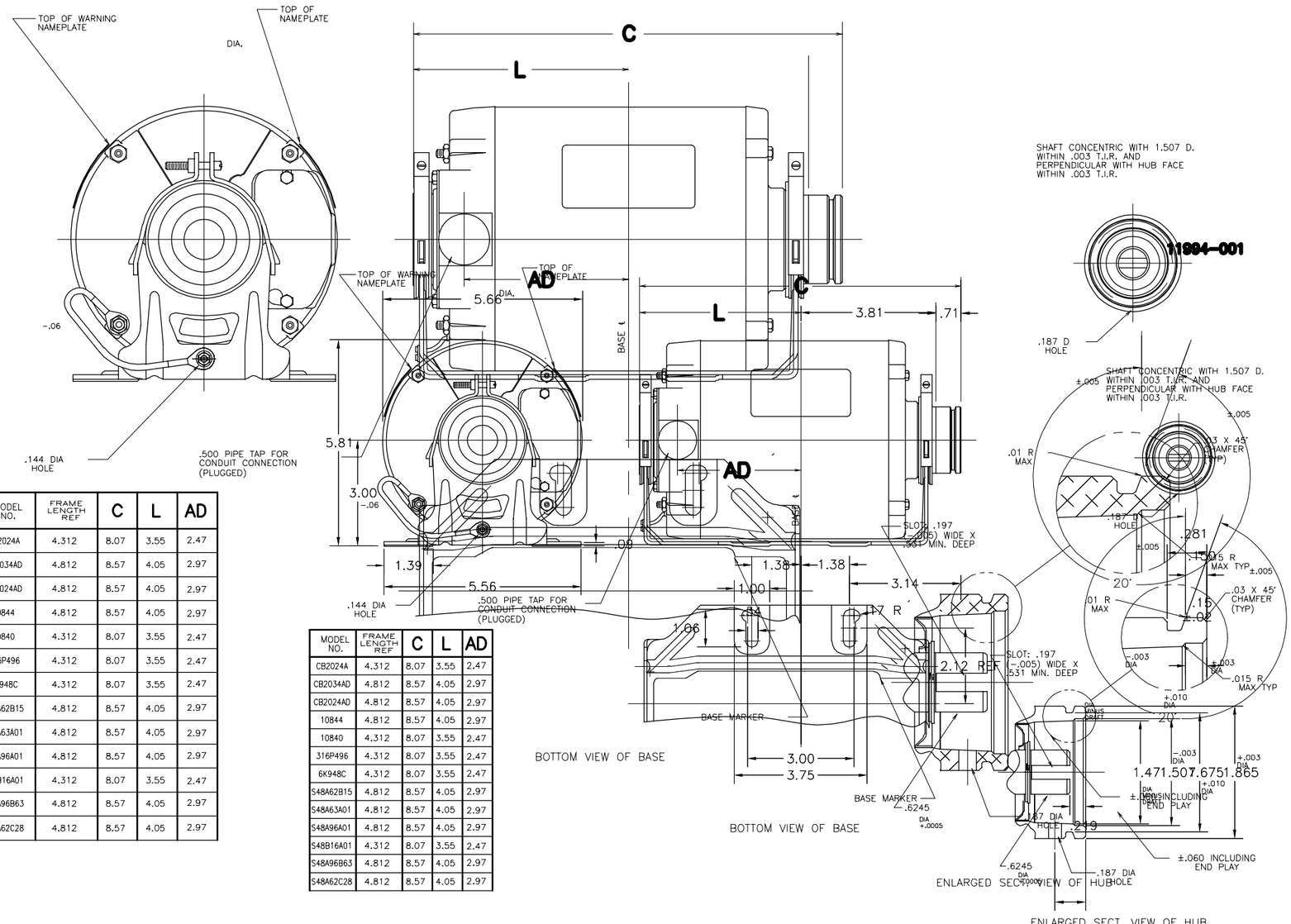

MODEL NO.	FRAME LENGTH REF	C	L	AD
CB2024A	4.312	8.07	3.55	2.47
CB2034AD	4.812	8.57	4.05	2.97
CB2024AD	4.812	8.57	4.05	2.97
10844	4.812	8.57	4.05	2.97
10840	4.312	8.07	3.55	2.47
316P496	4.312	8.07	3.55	2.47
6K948C	4.312	8.07	3.55	2.47
S48A62B15	4.812	8.57	4.05	2.97
S48A63A01	4.812	8.57	4.05	2.97
S48A96A01	4.812	8.57	4.05	2.97
S48B16A01	4.312	8.07	3.55	2.47
S48A96B63	4.812	8.57	4.05	2.97
S48A62C28	4.812	8.57	4.05	2.97

MODEL NO.	FRAME LENGTH REF	C	L	AD
CB2024A	4.312	8.07	3.55	2.47
CB2034AD	4.812	8.57	4.05	2.97
CB2024AD	4.812	8.57	4.05	2.97
10844	4.812	8.57	4.05	2.97
10840	4.312	8.07	3.55	2.47
316P496	4.312	8.07	3.55	2.47
6K948C	4.312	8.07	3.55	2.47
S48A62B15	4.812	8.57	4.05	2.97
S48A63A01	4.812	8.57	4.05	2.97
S48A96A01	4.812	8.57	4.05	2.97
S48B16A01	4.312	8.07	3.55	2.47
S48A96B63	4.812	8.57	4.05	2.97
S48A62C28	4.812	8.57	4.05	2.97

C 05/11/98 CHANGED DRAWING FORMAT ADDED NEW S48A62C28 JR WC 97PN0291
D 10/25/00 ADDED GROUND STRAP - KAC 0044046
E 06/25/03 ADDED 64 DEGREE POCKET TO ENDFRAME ED MC 0142932

RR0905
11/23/92
CLUSTER
09/20/96

MOTOR OUTLINE

11994-001

FR48/MOTOUT 92GR0658 1

Uncontrolled Copy

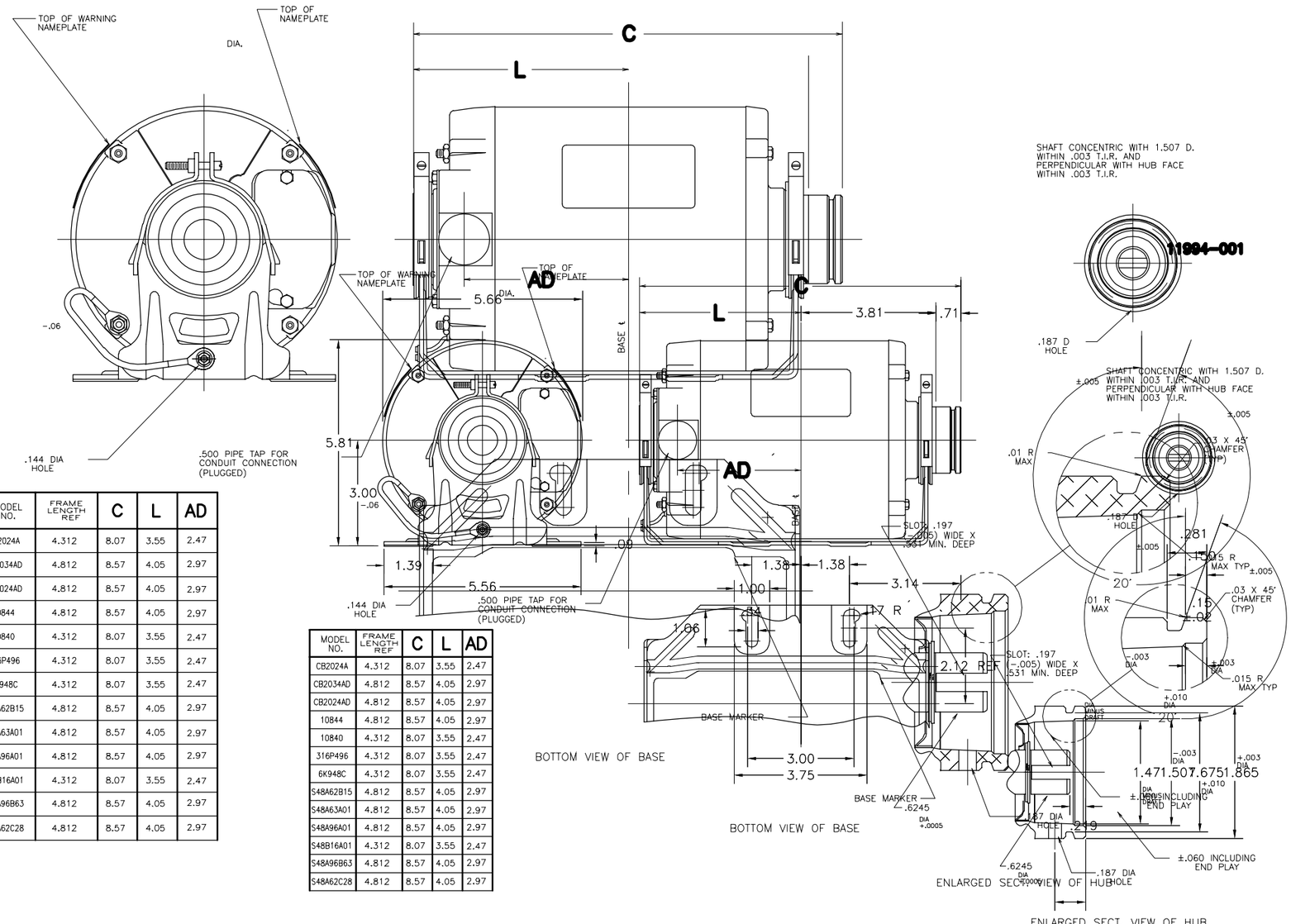

MODEL NO.	FRAME LENGTH REF	C	L	AD
CB2024A	4.312	8.07	3.55	2.47
CB2034AD	4.812	8.57	4.05	2.97
CB2024AD	4.812	8.57	4.05	2.97
10844	4.812	8.57	4.05	2.97
10840	4.312	8.07	3.55	2.47
316P496	4.312	8.07	3.55	2.47
6K948C	4.312	8.07	3.55	2.47
S48A62B15	4.812	8.57	4.05	2.97
S48A63A01	4.812	8.57	4.05	2.97
S48A96A01	4.812	8.57	4.05	2.97
S48B16A01	4.312	8.07	3.55	2.47
S48A96B63	4.812	8.57	4.05	2.97
S48A62C28	4.812	8.57	4.05	2.97

MODEL NO.	FRAME LENGTH REF	C	L	AD
CB2024A	4.312	8.07	3.55	2.47
CB2034AD	4.812	8.57	4.05	2.97
CB2024AD	4.812	8.57	4.05	2.97
10844	4.812	8.57	4.05	2.97
10840	4.312	8.07	3.55	2.47
316P496	4.312	8.07	3.55	2.47
6K948C	4.312	8.07	3.55	2.47
S48A62B15	4.812	8.57	4.05	2.97
S48A63A01	4.812	8.57	4.05	2.97
S48A96A01	4.812	8.57	4.05	2.97
S48B16A01	4.312	8.07	3.55	2.47
S48A96B63	4.812	8.57	4.05	2.97
S48A62C28	4.812	8.57	4.05	2.97

C 05/11/98 CHANGED DRAWING FORMAT ADDED NEW S48A62C28 JR WC 97PN0291
D 10/25/00 ADDED GROUND STRAP - KAC 0044046
E 06/25/03 ADDED 64 DEGREE POCKET TO ENDFRAME ED MC 0142932

RR0905
11/23/92
CLUSTER
09/20/96

MOTOR OUTLINE

11994-001

FR48/MOTOUT 92GR0658 1

Uncontrolled Copy

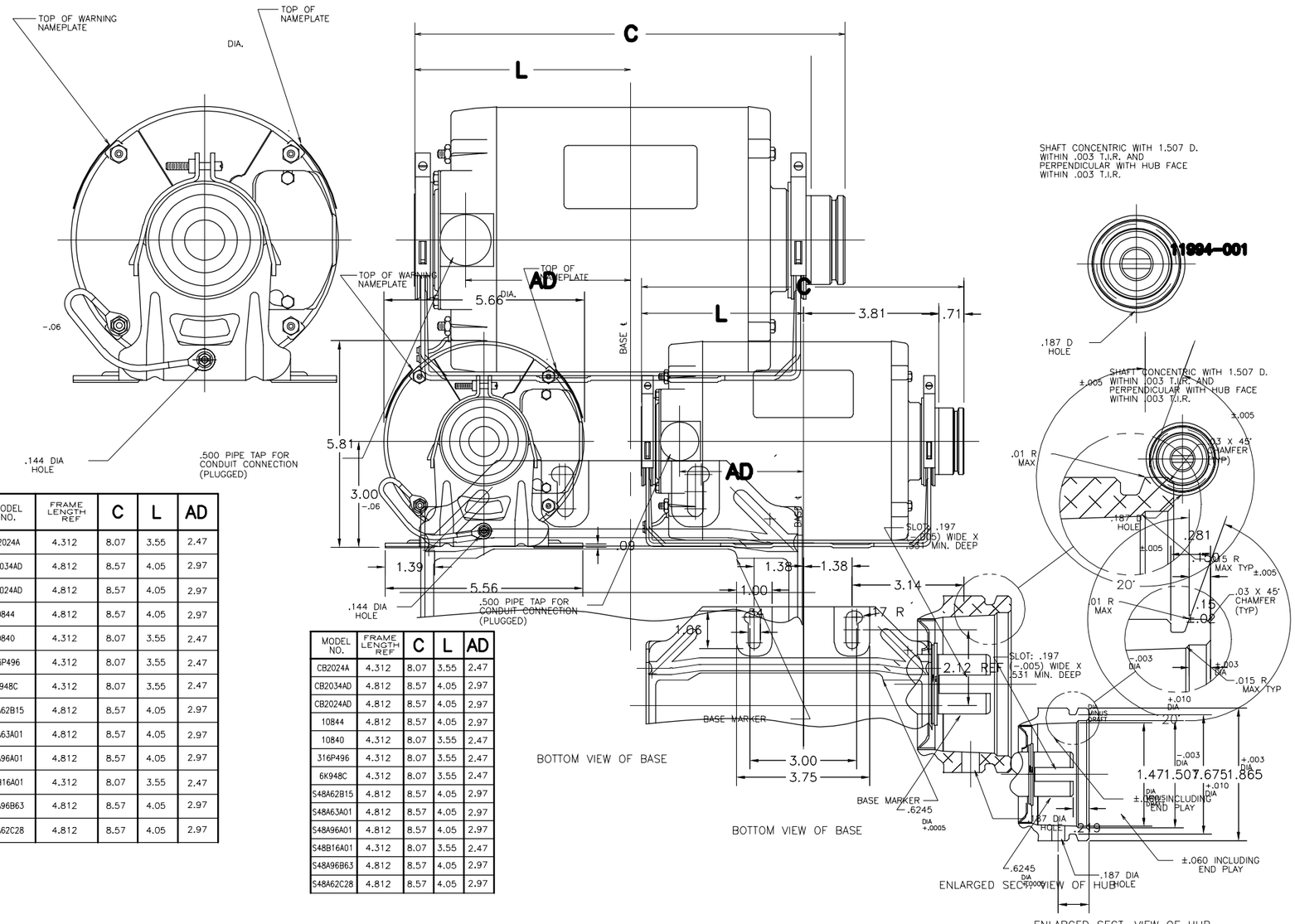

MODEL NO.	FRAME LENGTH REF	C	L	AD
CB2024A	4.312	8.07	3.55	2.47
CB2034AD	4.812	8.57	4.05	2.97
CB2024AD	4.812	8.57	4.05	2.97
10844	4.812	8.57	4.05	2.97
10840	4.312	8.07	3.55	2.47
316P496	4.312	8.07	3.55	2.47
6K948C	4.312	8.07	3.55	2.47
S48A62B15	4.812	8.57	4.05	2.97
S48A63A01	4.812	8.57	4.05	2.97
S48A96A01	4.812	8.57	4.05	2.97
S48B16A01	4.312	8.07	3.55	2.47
S48A96B63	4.812	8.57	4.05	2.97
S48A62C28	4.812	8.57	4.05	2.97

MODEL NO.	FRAME LENGTH REF	C	L	AD
CB2024A	4.312	8.07	3.55	2.47
CB2034AD	4.812	8.57	4.05	2.97
CB2024AD	4.812	8.57	4.05	2.97
10844	4.812	8.57	4.05	2.97
10840	4.312	8.07	3.55	2.47
316P496	4.312	8.07	3.55	2.47
6K948C	4.312	8.07	3.55	2.47
S48A62B15	4.812	8.57	4.05	2.97
S48A63A01	4.812	8.57	4.05	2.97
S48A96A01	4.812	8.57	4.05	2.97
S48B16A01	4.312	8.07	3.55	2.47
S48A96B63	4.812	8.57	4.05	2.97
S48A62C28	4.812	8.57	4.05	2.97

C 05/11/98 CHANGED DRAWING FORMAT ADDED NEW S48A62C28 JR WC 97PN0291
D 10/25/00 ADDED GROUND STRAP - KAC 0044046
E 06/25/03 ADDED 64 DEGREE POCKET TO ENDFRAME ED MC 0142932

RR0905
11/23/92
CLUSTER
09/20/96

MOTOR OUTLINE

11994-001

FR48/MOTOUT 92GR0658 1