Uncontrolled Copy

GROUP	TYPE	FRAME	"C"	(BS)	(XA)	(XB)	(XH)	(XG)	(XR)	(XK)
-01	CP	P145JM	15.54	6.98	2.34	1.64	4.64	4.72	5.00	4.08

NOTES

(1) ALL DIMENSIONS SHOWN IN PARENTHESIS ARE REFERENCE DIMENSIONS. ALL OTHER DIMENSIONS ARE TOLERANCED PER THE FOLLOWING CHART UNLESS OTHERWISE SPECIFIED.

"C" DIMENSION = +/- .046
SHAFT EXTENSION = +/- .034
LEAD LENGTHS = +/- 1.00
EXTENDED THRU BOLTS = +/- .050

2. PILOT DIAMETER IS CONCENTRIC WITH SHAFT CENTERLINE WITHIN .004 T.I.R.

3. FACE OF MOUNTING FLANGE IS PERPENDICULAR TO SHAFT CENTERLINE WITHIN .004 T.I.R.

4. THE 2 BOTTOM HOLES IN THE MOUNTING FLANGE ARE EQUIDISTANT FROM THE BOTTOM OF THE FEET WITHIN .030.

5. SHAFT RUNOUT NOT TO EXCEED .002 T.I.R.

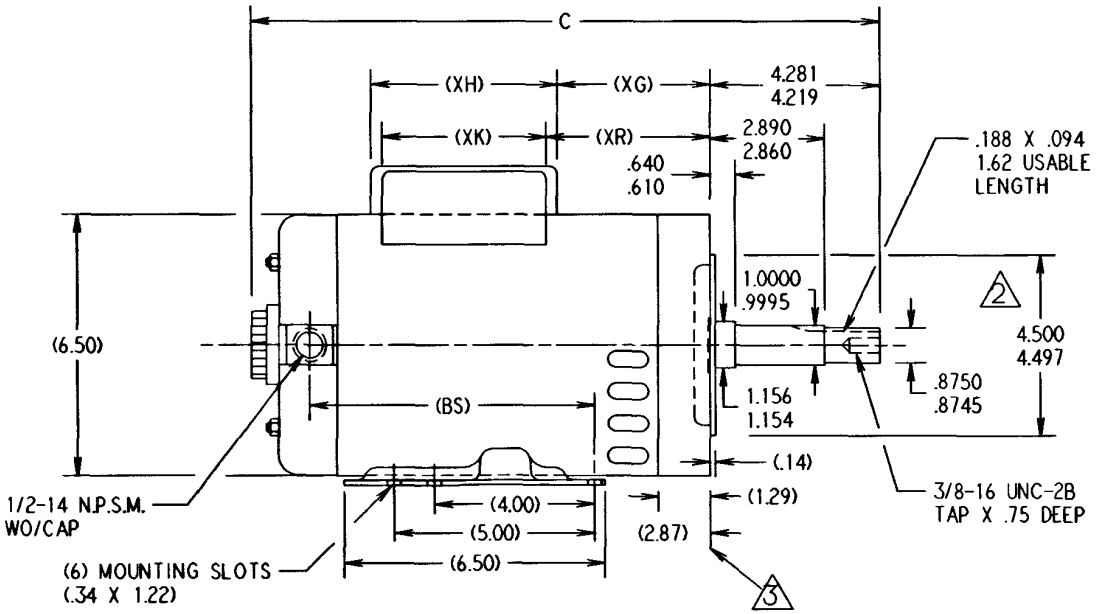

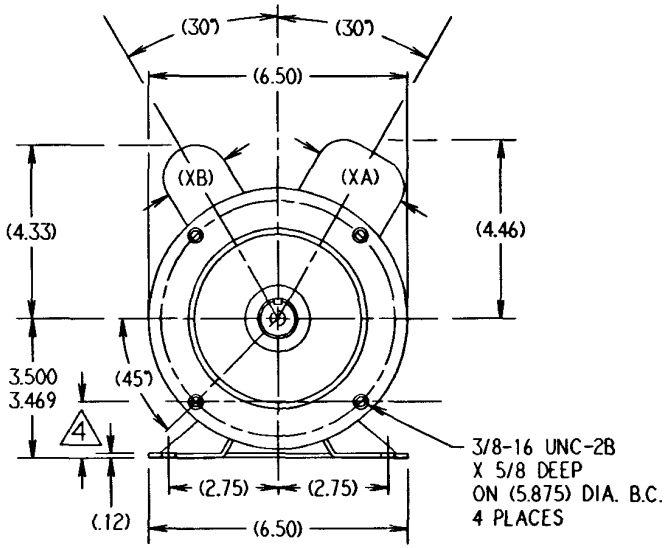

REVISIONS		
1	8-332732-00	CONVERTED FROM CADD TO EDITOR. SVR 03/18/93
2		

THIRD ANGLE PROJECTION

MagneTek
1881 Pine Street
St. Louis, Missouri 63103

TITLE
140T DWG O-LINE BB

DRN. LDH 04-06-90	CKD. MH 04-14-90	CONT. CODE	DRG. NO.	SIZE	CLASS NO.
APPD.	SCALE 1/3	5	178831	B	1920

THIS IS AN EDITOR DRAWING
DO NOT CHANGE MANUALLY