Uncontrolled Copy

ALL DIMENSIONS SHOWN IN PARENTHESIS ARE REFERENCE DIMENSIONS. ALL OTHER DIIMENSIONS ARE TOLERANCED PER THE FOLLOWING CHART UNLESS OTHERWISE SPECIFIED.

"C" DIM = ±.055[1.397]
SHAFT EXT. = ±.034[.864]
LEAD LENGTHS = ±1.00[25.40]
EXTENDED
THRU–BOLTS = .050[1.270]
ANGULAR DIMS. = ± 2°

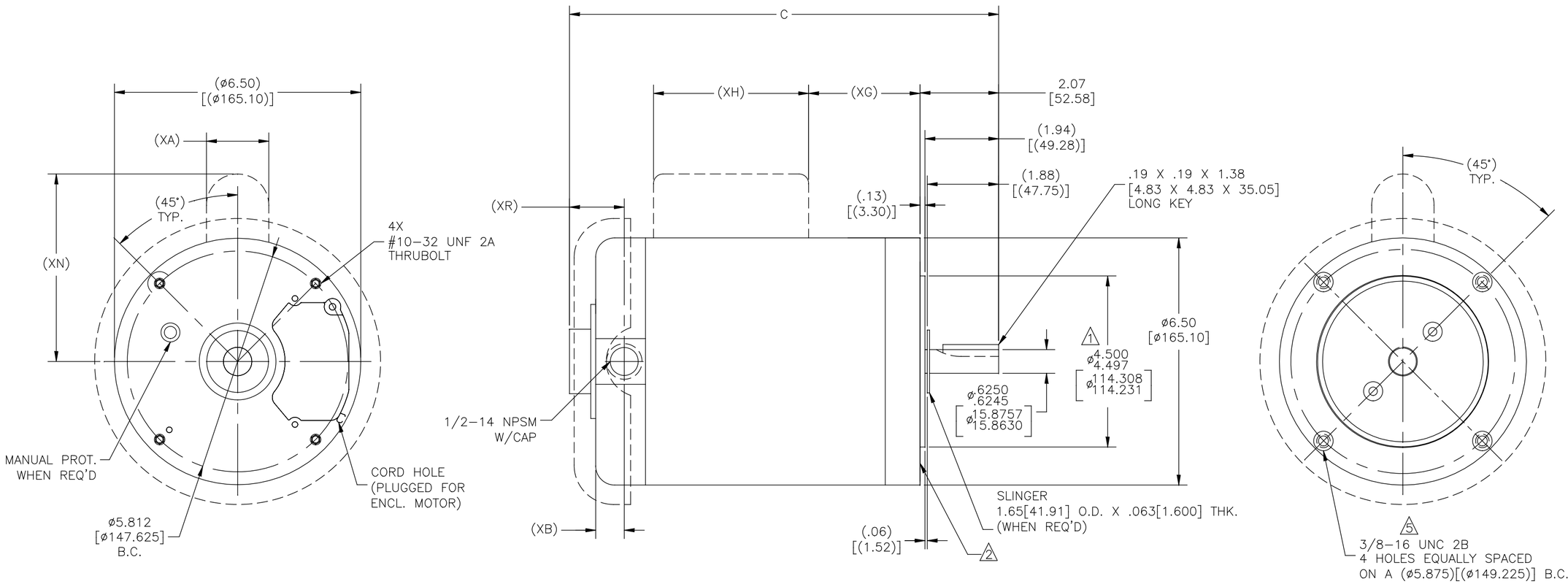

GROUP	FRAME	TYPE	MOTOR C	MOTOR XR	MOTOR XB	CAPACITOR COVER XA	CAPACITOR COVER XG	CAPACITOR COVER XH	CAPACITOR COVER XN
–01	H56C	SC	9.17[232.92]	1.44[36.58]	.69[17.53]	-----	-----	-----	-----
	H56C	CS	9.17[232.92]	1.44[36.58]	.69[17.53]	1.64[41.66]	.81[20.57]	4.08[103.63]	4.87[123.70]
	H56C	SP	9.17[232.92]	1.44[36.58]	.69[17.53]	-----	-----	-----	-----
–02	J56C	SC	10.17[258.32]	1.44[36.58]	.69[17.53]	-----	-----	-----	-----
	J56C	CS	10.17[258.32]	1.44[36.58]	.69[17.53]	1.64[41.66]	1.81[45.97]	4.08[103.63]	4.87[123.70]
	J56C	SP	10.17[258.32]	1.44[36.58]	.69[17.53]	-----	-----	-----	-----
–03	Y56C	SC	9.54[242.32]	1.44[36.58]	.69[17.53]	-----	-----	-----	-----
	Y56C	CS	9.54[242.32]	1.44[36.58]	.69[17.53]	1.64[41.66]	1.19[30.23]	4.08[103.63]	4.87[123.70]
	Y56C	SP	9.54[242.32]	1.44[36.58]	.69[17.53]	-----	-----	-----	-----
–04	G56C	SC	11.04[280.42]	1.44[36.58]	.69[17.53]	-----	-----	-----	-----
	G56C	CS	11.04[280.42]	1.44[36.58]	.69[17.53]	1.64[41.66]	2.68[68.07]	4.08[103.63]	4.87[123.70]
	G56C	SP	11.04[280.42]	1.44[36.58]	.69[17.53]	-----	-----	-----	-----
–05	K56C	SC	10.54[267.72]	1.44[36.58]	.69[17.53]	-----	-----	-----	-----
	K56C	CS	10.54[267.72]	1.44[36.58]	.69[17.53]	1.64[41.66]	2.19[55.63]	4.08[103.63]	4.87[123.70]
	K56C	SP	10.54[267.72]	1.44[36.58]	.69[17.53]	-----	-----	-----	-----
–06	L56C	SC	11.29[286.77]	1.44[36.58]	.69[17.53]	-----	-----	-----	-----
	L56C	CS	11.29[286.77]	1.44[36.58]	.69[17.53]	1.64[41.66]	2.93[74.42]	4.08[103.63]	4.87[123.70]
	L56C	SP	11.29[286.77]	1.44[36.58]	.69[17.53]	-----	-----	-----	-----

NOTES:
1. PILOT DIAMETER IS CONCENTRIC WITH SHAFT CENTERLINE WITHIN .004[.102] TIR.
2. FACE OF MOUNTING FLANGE IS PERPENDICULAR TO SHAFT CENTERLINE WITHIN .004[.102] TIR.
3. SHAFT RUNOUT NOT TO EXCEED .002[.051] T.I.R.
4. END PLAY NOT TO EXCEED .010[.254] T.I.R.
5. DEPTH OF HOLES IN MOUNTING FLANGE ARE .75[19.05] FOR ALUM. AND .63[16.00] FOR CAST IRON.

DRAWING REVISION	REVISION BY	DATE
E	A.BAUGHMAN	05–11–2016
ECO	APPROVED BY	DATE
ECO–0098977	A.BAUGHMAN	05–11–2016
ECO DESCRIPTION		
SEE PROJECT		

COPYRIGHT REGAL BELOIT AMERICA, INC. ALL RIGHTS RESERVED. PROPRIETARY AND CONFIDENTIAL INFORMATION – THIS DOCUMENT IS THE PROPERTY OF REGAL BELOIT AMERICA, INC. ("OWNER") AND CONTAINS OWNER'S PROPRIETARY INFORMATION. ANY PERSON, CORPORATION OR OTHER FIRM RECEIVING IT IS DEEMED, BY RECEIVING IT, TO AGREE THAT IT, AND/OR ANY PART OF IT, SHALL NOT BE DISCLOSED TO ANY PERSON, CORPORATION OR OTHER ENTITY, DUPLICATED, AND/OR USED, EXCEPT AS EXPRESSLY APPROVED IN WRITING IN ADVANCE BY OWNER. THIS DOCUMENT SHALL BE RETURNED TO OWNER UPON REQUEST. IT MAY BE SUBJECT TO CERTAIN RESTRICTIONS UNDER APPLICABLE EXPORT CONTROL LAWS AND REGULATIONS.

TOLERANCES UNLESS OTHERWISE SPECIFIED

DEC.	INCH	mm	ANGLE
.X	±0.1	[±2.5]	±0.5°
.XX	±0.02	[±0.51]	
.XXX	±0.005	[±0.127]	
.XXXX	±0.0005	[±0.0127]	

REMOVE BURRS & BREAK SHARP EDGES .003/.015 [.076/.381]
CORNER FILLETS .02 [.51]
MACHINED SURFACES 125 INCH / 3.2 mm
mm SHOWN IN [BRACKETS]

DRAWN BY:	RSH
DATE:	11–25–1997
APPROVED BY:	TJD
DATE:	11–25–1997
REFERENCE	–
THIRD ANGLE PROJECTION	

Regal Beloit America, Inc.

DESCRIPTION: OUTLINE

MATERIAL: –
PROCESS/FINISH: –

SIZE	DWG NO	SHEET
C	189033	1