Uncontrolled Copy

GENERAL INFORMATION:

SHAFT RUNOUT:	.001[.03] T.I.R PER INCH LENGTH OF EXTENSION
END PLAY:	.010[.25] TO .063[1.60]
BEARINGS:	SLEEVE
MOUNTING POSITION:	ALL ANGLE

ELECTRICAL DATA:

OVERLOAD PROTECTOR:	AUTOMATIC RESET (T.I. 7AM 304)
LEADS:	NO. 18 AWG. .06[1.5] THK. 105°C PVC INSUL.
GROUND LEAD:	NO. 18AWG .03[.8] THK. 125°C INSUL.

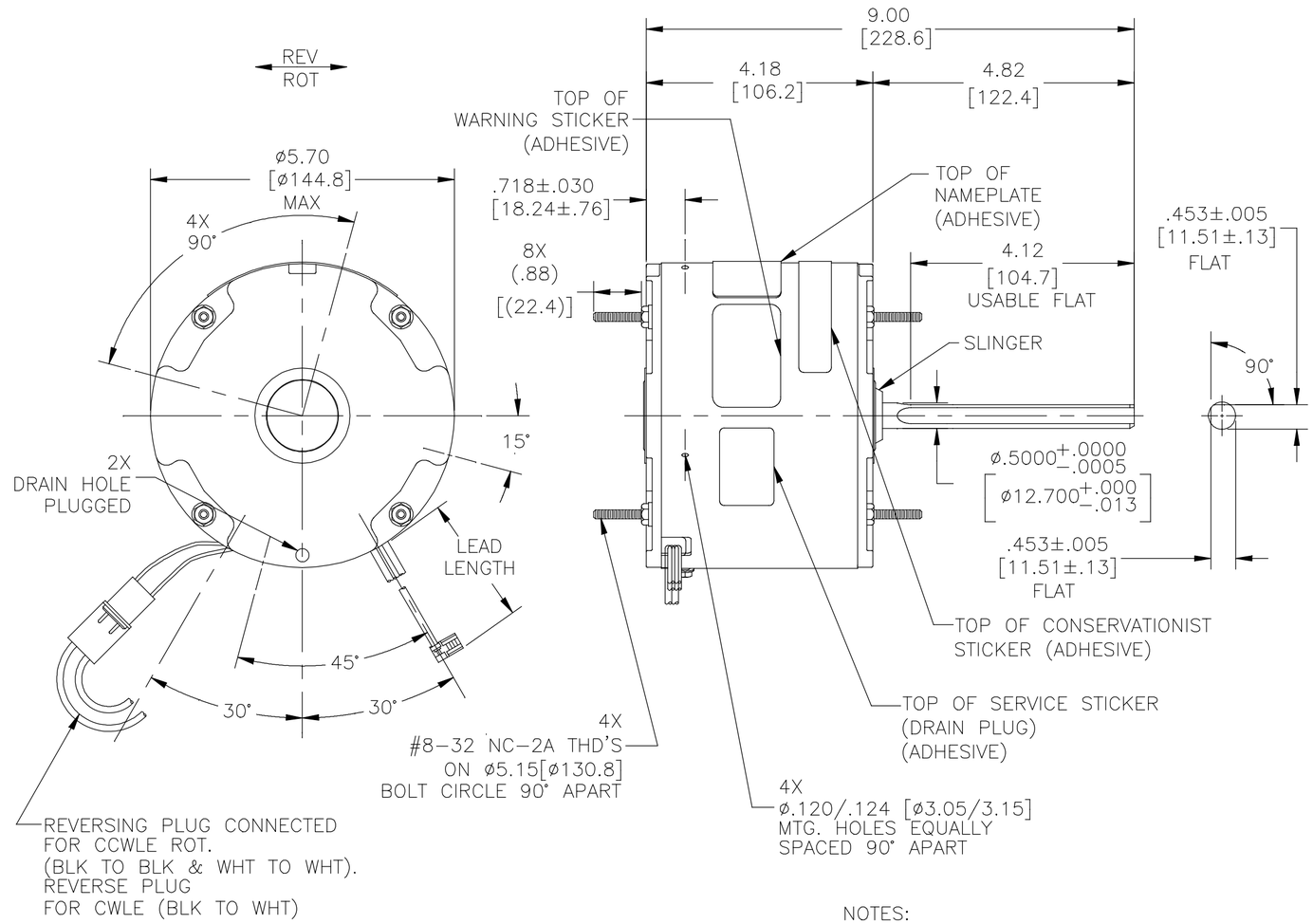

NOTES:
4X SCREWS 615982−001 TO BE PUT IN A POLYBAG & HANG ON SHAFT.

NAMEPLATE DATA:

MODEL NO.: F48872A01
CUST. P/N: ORM1008
HP: 1/8
ROT.: REVERSIBLE
RPM: 825
TYPE: UF
FRAME: 48Y
VOLTS: 208−230
PH: 1
AMPS: 0.7(0.9 MAX)
HZ: 60
INS.: B*
AMB.: 50° C
DUTY: AIR OVER
CAP.: 5 MFD/370V
ENCL: ENCLOSED
UL LOGO
CSA LOGO
THERMALLY PROTECTED
TYPE C

EXTERNAL CONNECTION DIAGRAM

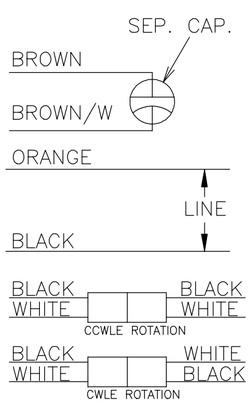

614131−099

PERFORMANCE CURVE NO.	TORQUE @ 825 RPM (25°C)	APPROVED SAMPLE	UL COMPONENT		CSA	
			FILE #	CCN #	FILE #	CLASS #
C30274	15 OZ. FT.	89AC023B	E46412	PRGY2	LR43341	4211−01

BLACK/WHITE	3.5/5.5 [89/140]	REVERSING PLUG
BROWN	37.0/40.0 [940/1016]	.25[6.3] FLAG
BROWN/WHITE	40.0/43.0 [1016/1092]	.25[6.3] FLAG
ORANGE	40.0/43.0 [1016/1092]	.25[6.3] FLAG
BLACK	37.0/40.0 [940/1016]	.25[6.3] FLAG
COLOR	LENGTH	TERMINAL OR STRIP LENGTH

LEAD DATA

REGAL−BELOIT CORPORATION (RBC) PROVIDES TECHNICAL ASSISTANCE TO OUR CUSTOMERS IN SEVERAL AREAS. SINCE RBC DOES NOT RECEIVE ALL DATA CONCERNING THE USE AND APPLICATION OF THE MOTOR, THE SUITABILITY OF THE MOTOR FOR THE APPLICATION MUST BE DETERMINED BY THE CUSTOMER.

DIMENSIONS WITHOUT TOLERANCES ARE FOR REFERENCE ONLY.

MAIN FRAME − OLE	ENCLOSED
END FRAME − OLE	ENCLOSED
MAIN FRAME − LE	ENCLOSED
END FRAME − LE	ENCLOSED

ENCLOSURE

CUSTOMER	DISTRIBUTION

DRAWING REVISION D	REVISION BY NANCY.LIU	DATE 01−16−2018
ECO ECO−0137545	APPROVED BY CADDIE.ZHOU	DATE 01−16−2018
ECO DESCRIPTION SEE ECO		

COPYRIGHT REGAL BELOIT AMERICA, INC. ALL RIGHTS RESERVED.
PROPRIETARY AND CONFIDENTIAL INFORMATION − THIS DOCUMENT IS THE PROPERTY OF REGAL BELOIT AMERICA, INC. ("OWNER") AND CONTAINS OWNER'S PROPRIETARY INFORMATION. ANY PERSON, CORPORATION OR OTHER FIRM RECEIVING IT IS DEEMED, BY RECEIVING IT, TO AGREE THAT IT, AND/OR ANY PART OF IT, SHALL NOT BE DISCLOSED TO ANY PERSON, CORPORATION OR OTHER ENTITY, DUPLICATED, AND/OR USED, EXCEPT AS EXPRESSLY APPROVED IN WRITING IN ADVANCE BY OWNER. THIS DOCUMENT SHALL BE RETURNED TO OWNER UPON REQUEST. IT MAY BE SUBJECT TO CERTAIN RESTRICTIONS UNDER APPLICABLE EXPORT CONTROL LAWS AND REGULATIONS.

DRAWN BY: D.ZHANG	Regal Beloit America, Inc.
DATE: 05−19−2011	DESCRIPTION MODEL−RFHP−48FR OUTLINE
APPROVED BY: C.ZHOU	
DATE: 05−19−2011	
PROCESS/FINISH −	MATERIAL −
THIRD ANGLE PROJECTION	SIZE C / DWG NO ORM1008 / SHEET 1