Uncontrolled Copy

GENERAL INFORMATION:

SHAFT RUNOUT:	.001 [.025] T.I.R. PER INCH LENGTH OF EXTENSION
BEARINGS:	BALL
MOUNTING POSITION:	ALL ANGLE

ELECTRICAL DATA:

OVERLOAD PROTECTOR:	AUTOMATIC RESET (SENSATA 7AM 036)
LEADS:	NO. 18 GA., .06 [1.52] THK. PVC 105°C INSUL.
REVERSING PLUGS:	NO. 18 GA., .03 [.76] THK. XLP 125°C INSUL.
GROUND LEAD:	NO. 18 GA., .03 [.76] THK. (GREEN/YELLOW) INSUL.

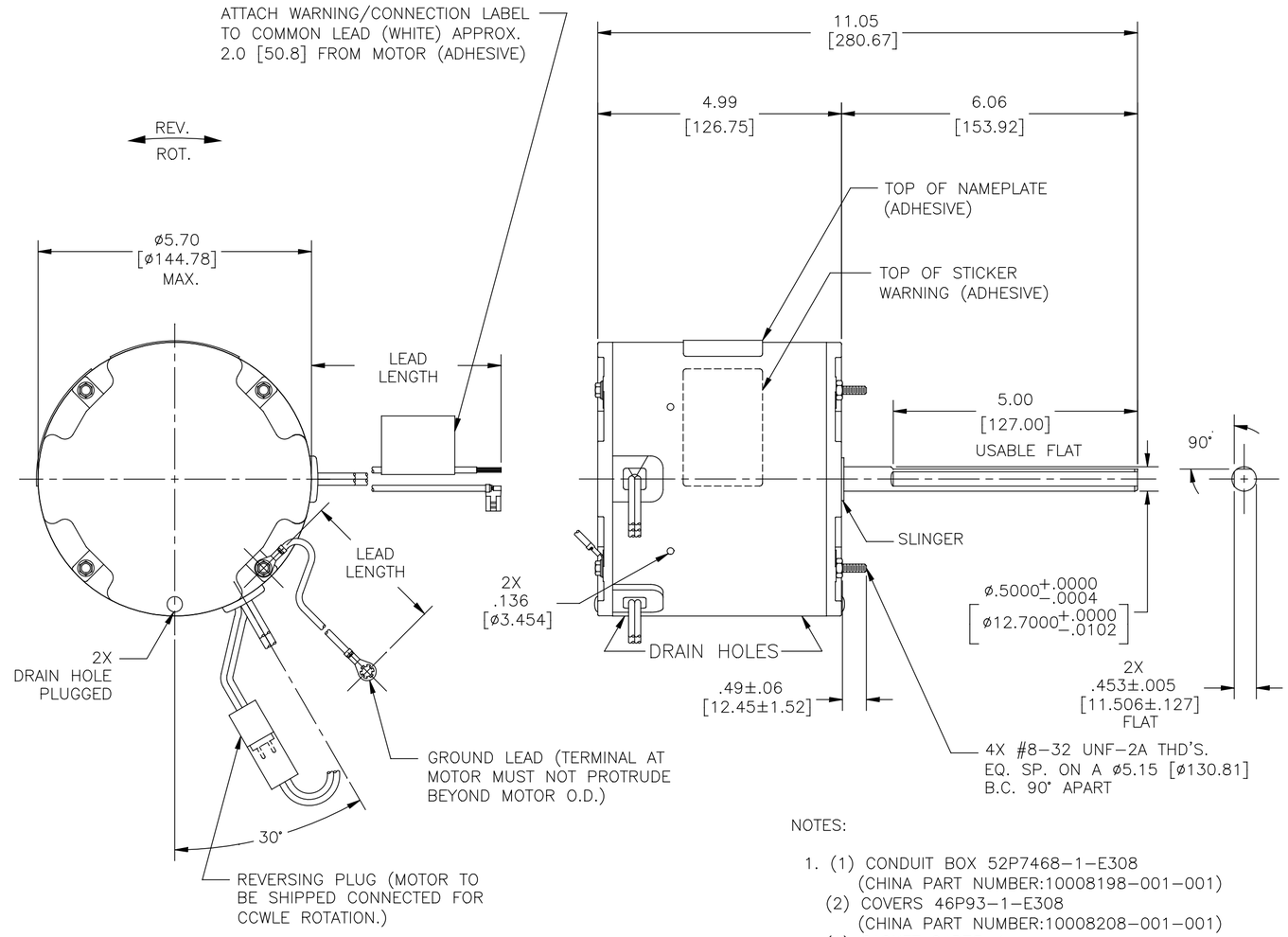

NOTES:

1. (1) CONDUIT BOX 52P7468–1–E308
   (CHINA PART NUMBER:10008198–001–001)
   (2) COVERS 46P93–1–E308
   (CHINA PART NUMBER:10008208–001–001)
   (1) GASKET 24P75–1
   (4) SCREWS 15771401
   TO BE PUT IN POLY BAG AND PACKED SEPARATE WITH EACH MOTOR.

NAMEPLATE DATA:	EXTERNAL CONNECTION DIAGRAM
MODEL NO.: F48Z63A01 CUST. P/N: 788A HP: 1/4 ROT.: REVERSIBLE RPM: 1075 TYPE: UF FRAME: 48Y VOLTS: 460 PH: 1 AMPS: 0.75 HZ: 60 INS.: B AMB.: 60° C DUTY: AIR OVER CAP.: 7.5 MFD/370 V ENCL: ENCLOSED UL LOGO CSA LOGO THERMALLY PROTECTED	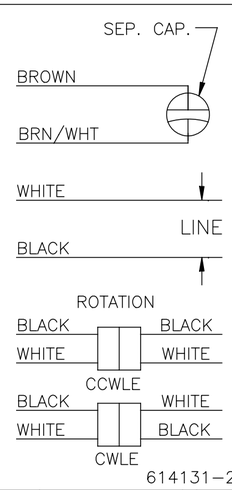

614131–242

PERFORMANCE CURVE NO.	TORQUE @ 1075 RPM (25°C)	APPROVED SAMPLE	UL COMPONENT		CSA	
			FILE #	CCN #	FILE #	CLASS #
C32720	25.8 OZ. FT.	0603113B	E46412	PRGY2	LR43341	4211–01

GREEN/YELLOW (GROUND)	11/13 [279/330]	#10 EYELET
BLACK/WHITE	3/5 [76/127]	REVERSING PLUG
BROWN	25/27 [635/686]	.25 [6.35] FLAG
BROWN/WHITE	25/27 [635/686]	.25 [6.35] FLAG
WHITE	25/27 [635/686]	.50 [12.70] SKIN
BLACK	25/27 [635/686]	.50 [12.70] SKIN
COLOR	LENGTH	TERMINAL OR STRIP LENGTH

LEAD DATA

REGAL–BELOIT CORPORATION (RBC) PROVIDES TECHNICAL ASSISTANCE TO OUR CUSTOMERS IN SEVERAL AREAS. SINCE RBC DOES NOT RECEIVE ALL DATA CONCERNING THE USE AND APPLICATION OF THE MOTOR, THE SUITABILITY OF THE MOTOR FOR THE APPLICATION MUST BE DETERMINED BY THE CUSTOMER.

DIMENSIONS WITHOUT TOLERANCES ARE FOR REFERENCE ONLY.

MAIN FRAME – OLE	ENCLOSED
END FRAME – OLE	ENCLOSED
MAIN FRAME – LE	ENCLOSED
END FRAME – LE	ENCLOSED

ENCLOSURE

CUSTOMER	DISTRIBUTION SERVICE

DRAWING REVISION D	REVISION BY G.ZHAO	DATE 08–23–2016
ECO ECO–0107924	APPROVED BY J.ZHU	DATE 08–23–2016
ECO DESCRIPTION CHANGE THE NOTES		

COPYRIGHT REGAL BELOIT AMERICA, INC. ALL RIGHTS RESERVED. PROPRIETARY AND CONFIDENTIAL INFORMATION – THIS DOCUMENT IS THE PROPERTY OF REGAL BELOIT AMERICA, INC. ("OWNER") AND CONTAINS OWNER'S PROPRIETARY INFORMATION. ANY PERSON, CORPORATION OR OTHER FIRM RECEIVING IT IS DEEMED, BY RECEIVING IT, TO AGREE THAT IT, AND/OR ANY PART OF IT, SHALL NOT BE DISCLOSED TO ANY PERSON, CORPORATION OR OTHER ENTITY, DUPLICATED, AND/OR USED, EXCEPT AS EXPRESSLY APPROVED IN WRITING IN ADVANCE BY OWNER. THIS DOCUMENT SHALL BE RETURNED TO OWNER UPON REQUEST. IT MAY BE SUBJECT TO CERTAIN RESTRICTIONS UNDER APPLICABLE EXPORT CONTROL LAWS AND REGULATIONS.

DRAWN BY: J. Rupert	Regal Beloit America, Inc.
DATE: 05–13–2011	
APPROVED BY: J. Rupert	DESCRIPTION MODEL–RFHP–48FR OUTLINE
DATE: 05–13–2011	
PROCESS/FINISH –	MATERIAL –
THIRD ANGLE PROJECTION	SIZE C / DWG NO 788A / SHEET 1