版本	ECO	编制	日期	批准	日期
H	ECO-0034278	A.RODRIGUEZ	07-03-2013	D.MUÑOZ	07-03-2013

总技术要求：

轴跳动：

端部窜动量

轴承：

安装位置：

电气数据：

过载保护：

引线：

接地线：

铭牌数据	外部数据线
MODEL NO.: F48L72A01 CUST. P/N: SA1036V1 HP: 1/3 ROT.: CCWLE RPM: 1075/3 SPD TYPE: UF FRAME: 48Y VOLTS: 208-230 PH: 1 AMPS: 2.2 (2.2 MAX) HZ: 60 INS.: B AMB.: 40°C DUTY: AIR OVER CAP.: 5 MFD/370V ENCL: SEMI-ENCL. UL LOGO CSA LOGO THERMALLY PROTECTED	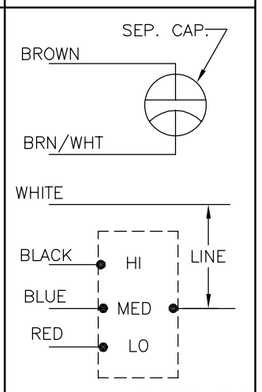

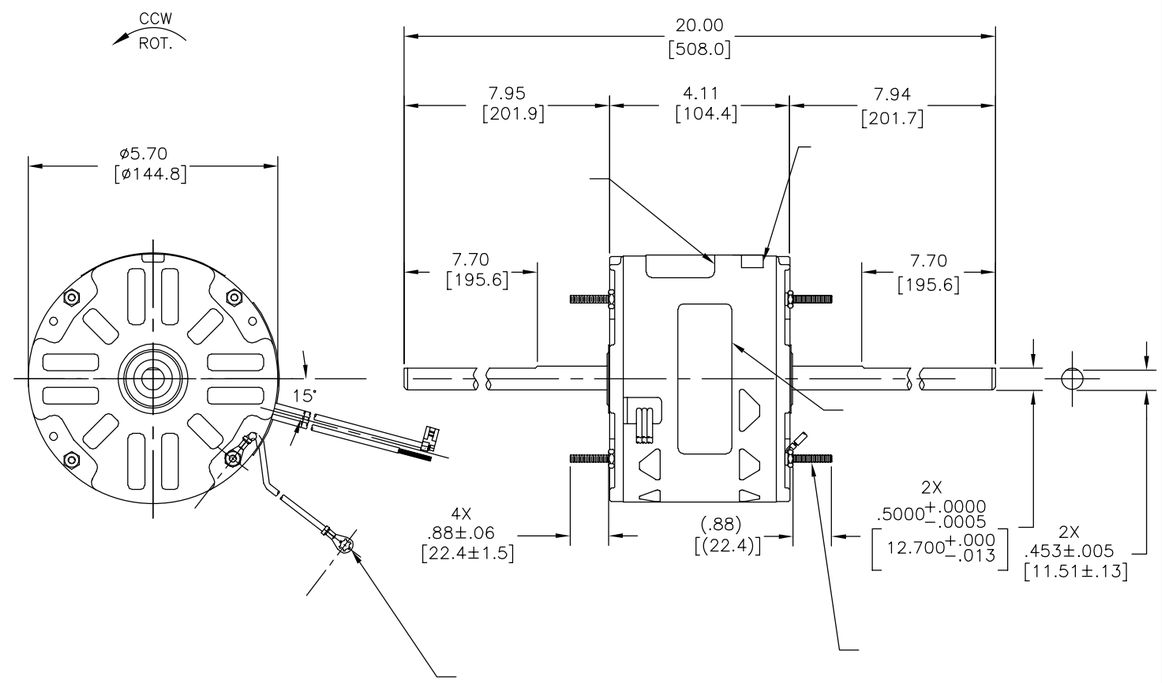

性能曲线编号	转矩在 @ --- RPM (25° C)	批准样品	UL部件 文件号	UL部件 指南	CSA 文件号	CSA 指南
C31662	28.4 OZ. FT.	98AC197A	E46412	PRGY2	LR43341	4211-01

颜色	长度	端子或剥线长度
	30.0/33.0 [762/838]	
	36.0/39.0 [914/991]	
	36.0/39.0 [914/991]	
	36.0/39.0 [914/991]	
	36.0/39.0 [914/991]	
	36.0/39.0 [914/991]	
	36.0/39.0 [914/991]	

引线数据

密封性	
无引线端机壳	
无引线端端盖	
有引线端机壳	
有引线端端盖	

用户	DISTRIBUTION SERVICE

形位公差
- 平面度
- 直线度
- 倾斜度
- 垂直度
- 平行度
- 圆度
- 圆柱度
- 面轮廓度
- 线轮廓度
- 圆跳动
- 位置度
- 同轴度
- 对称度

ASME Y14.5M 1994

REGAL-BELOIT CORPORATION (RBC) 在个别领域为客户提供技术支持。鉴于 RBC 未收到任何涉及电机使用和应用环境的数据，电机的适用性由客户自己决定。

未注公差尺寸仅供参考。

绘图:	J.RUPERT	08-19-1998
批准:	T.RILE	08-20-1998
第三角投影	图纸格式发布日期	11-11-2011
	图纸格式版本	H

REGAL-BELOIT CORPORATION

名称: MODEL-RFHP-48FR OUTLINE

图幅: C | 图号: SA1036V1

比例: NONE | 页号: 1

REV	ECO	REV BY	DATE	APPD	DATE
H	ECO-0034278	A.RODRIGUEZ	07-03-2013	D.MUÑOZ	07-03-2013

GENERAL INFORMATION:

SHAFT RUNOUT:	.001[.03] T.I.R. PER INCH LENGTH OF EXTENSION.
END PLAY:	.010[.25] TO .063[1.60]
BEARINGS:	SLEEVE
MOUNTING POSITION:	HORIZONTAL

ELECTRICAL DATA:

OVERLOAD PROTECTOR:	AUTOMATIC RESET (SENSATA 7AM 036)
LEADS:	NO. 18 GA., .06[1.5] THK. PVC 105°C INSUL.
GROUND LEAD:	NO. 18 GA., .03[.08] THK. (GREEN) INSUL.

NAMEPLATE DATA:

MODEL NO.: F48L72A01
CUST. P/N: SA1036V1
HP: 1/3
ROT.: CCWLE
RPM: 1075/3 SPD
TYPE: UF
FRAME: 48Y
VOLTS: 208-230
PH: 1
AMPS: 2.2 (2.2 MAX)
HZ: 60
INS.: B
AMB.: 40°C
DUTY: AIR OVER
CAP.: 5 MFD/370V
ENCL: SEMI-ENCL.
UL LOGO
CSA LOGO
THERMALLY PROTECTED

EXTERNAL CONNECTION DIAGRAM

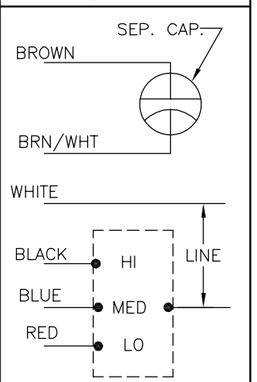

614131-106

PERFORMANCE CURVE NO.	TORQUE @ 1075 RPM (25°C)	APPROVED SAMPLE	UL COMPONENT FILE #	UL COMPONENT CCN #	CSA FILE #	CSA CLASS #
C31662	28.4 OZ. FT.	98AC197A	E46412	PRGY2	LR43341	4211-01

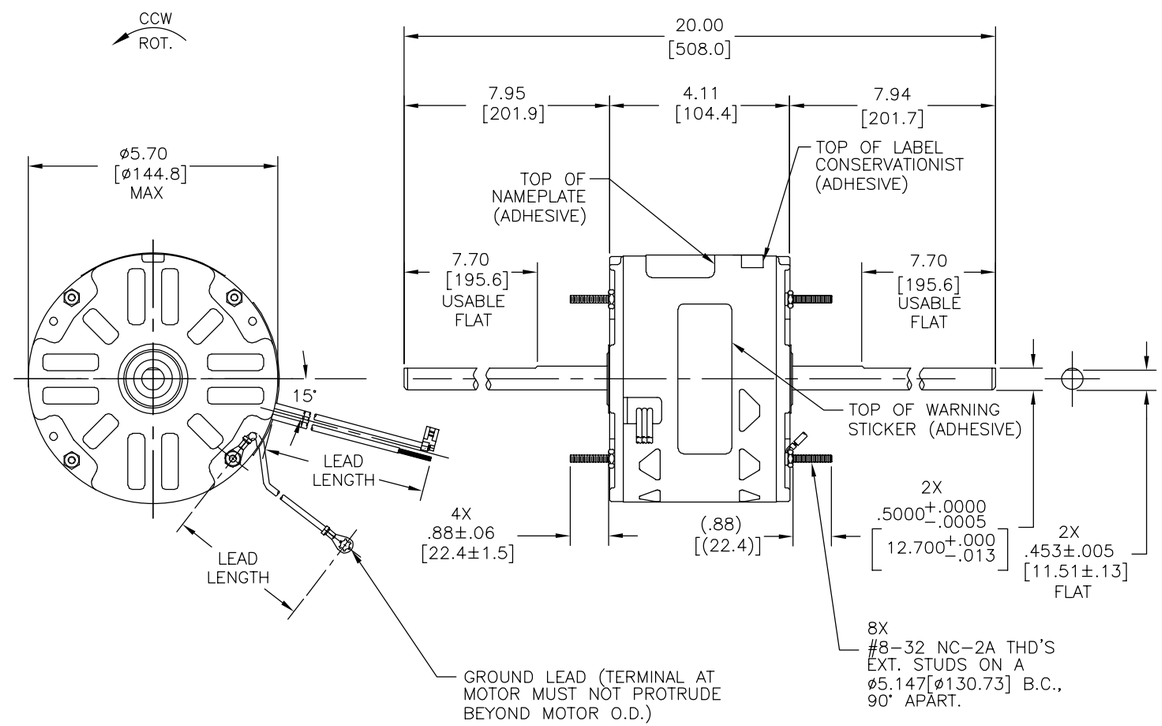

COLOR	LENGTH	TERMINAL OR STRIP LENGTH
GREEN (GRD)	30.0/33.0 [762/838]	#10 EYELET
BROWN/WHITE	36.0/39.0 [914/991]	.25[6.4] FLAG
BROWN	36.0/39.0 [914/991]	.25[6.4] FLAG
WHITE	36.0/39.0 [914/991]	.50[12.7] SKIN
BLACK	36.0/39.0 [914/991]	.50[12.7] SKIN
BLUE	36.0/39.0 [914/991]	.50[12.7] SKIN
RED	36.0/39.0 [914/991]	.50[12.7] SKIN

LEAD DATA

MAIN FRAME - OLE	SEMI-ENCLOSED
END FRAME - OLE	OPEN
MAIN FRAME - LE	SEMI-ENCLOSED
END FRAME - LE	OPEN

ENCLOSURE

CUSTOMER	DISTRIBUTION SERVICE

GEOMETRIC CHARACTERISTICS & SYMBOLS
- FLATNESS
- STRAIGHTNESS
- ANGULARITY
- PERPENDICULARITY (SQUARENESS)
- PARALLELISM
- ROUNDNESS (CIRCULARITY)
- CYLINDRICITY
- PROFILE OF ANY SURFACE
- PROFILE OF ANY LINE
- RUNOUT
- TRUE POSITION
- CONCENTRICITY
- SYMMETRY

ASME Y14.5M 1994

REGAL-BELOIT CORPORATION (RBC) PROVIDES TECHNICAL ASSISTANCE TO OUR CUSTOMERS IN SEVERAL AREAS. SINCE RBC DOES NOT RECEIVE ALL DATA CONCERNING THE USE AND APPLICATION OF THE MOTOR, THE SUITABILITY OF THE MOTOR FOR THE APPLICATION MUST BE DETERMINED BY THE CUSTOMER.

DIMENSIONS WITHOUT TOLERANCES ARE FOR REFERENCE ONLY.

DR BY: J.RUPERT	08-19-1998
APPD: T.RILE	08-20-1998
THIRD ANGLE PROJECTION	EDS DATE 11-11-2011
	FORMAT REV H

REGAL-BELOIT CORPORATION

DESCRIPTION: MODEL-RFHP-48FR OUTLINE

SIZE: C | DWG NO: SA1036V1

SCALE: NONE | SHEET 1

REVISION:	ECO	REVISADO POR:	FECHA:	APROBADO POR:	FECHA:
H	ECO-0034278	A.RODRIGUEZ	07-03-2013	D.MUÑOZ	07-03-2013

INFORMACION GENERAL:

OSCILACION DE FLECHA: .001[.03] L.T.I. POR 1.00[25.4] LONG. DE EXTENSION.

JUEGO AXIAL: .10[.25] A .063[1.60]

BALEROS: MANGA

POSICION DEL MONTAJE: HORIZONTAL

INFORMACION ELECTRICA:

PROTECTOR DE SOBRECARGA: REINICIO AUTOMATICO (SENSATA 7AM 036)

CABLES: CALIBRE #18, .06[1.5] GROSOR PVC 105°C AISLADOS

CABLE DE TIERRA: CALIBRE #18, .03[.08] GROSOR (VERDE) AISLADO

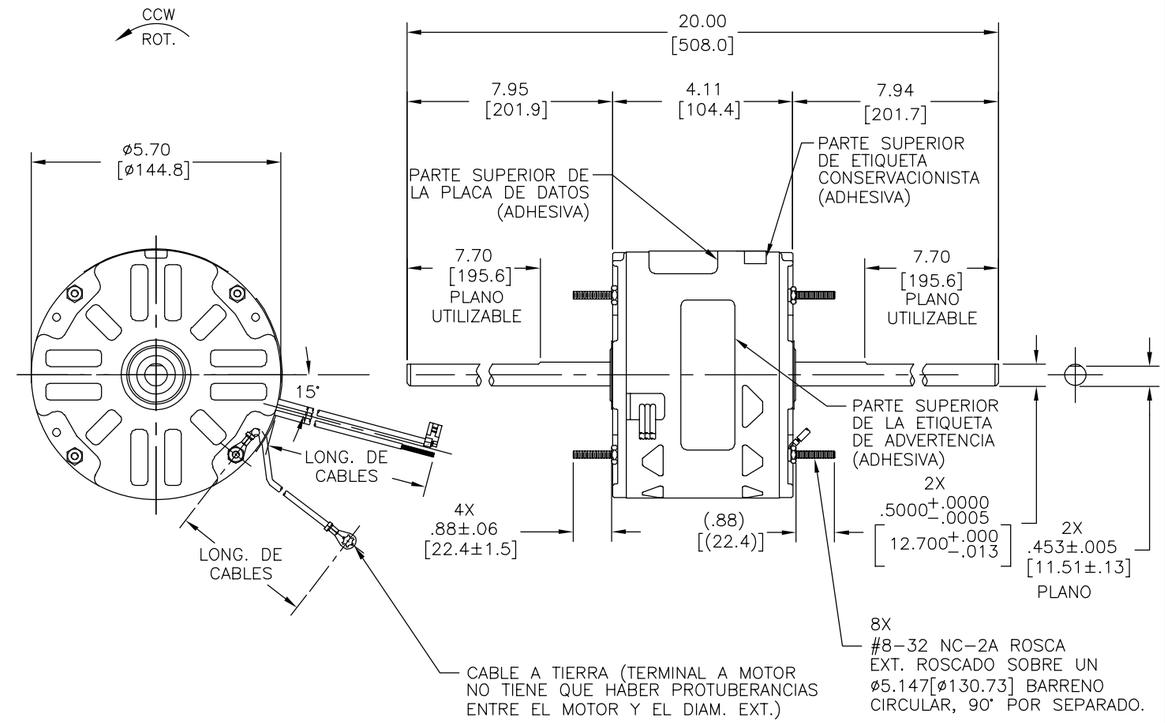

INFORMACION DE ETIQUETA:	DIAGRAMA DE CONEXION EXTERNA
MODEL NO.: F48L72A01 CUST. P/N: SA1036V1 HP: 1/3 ROT.: CCWLE RPM: 1075/3 SPD TYPE: UF FRAME: 48Y VOLTS: 208-230 PH: 1 AMPS: 2.2 (2.2 MAX) HZ: 60 INS.: B AMB.: 40°C DUTY: AIR OVER CAP.: 5 MFD/370V ENCL: SEMI-ENCL. UL LOGO CSA LOGO THERMALLY PROTECTED	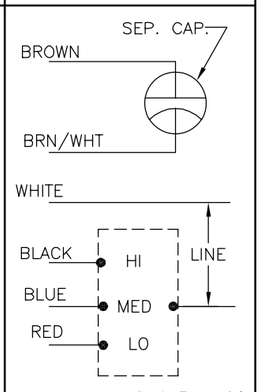

614131-106

CURVAS DE FUNCIONAMIENTO	TORSION @ 1075 RPM (25°C)	MUESTRA APROBADA	COMPONENTE UL #ARCHIVO	COMPONENTE UL CCN #	CSA #ARCHIVO	CSA CLASE #
C31662	28.4 OZ. FT.	98AC197A	E46412	PRGY2	LR43341	4211-01

COLOR	LONGITUD	TERMINAL O LONGITUD DE DESFORRE
VERDE (TIERRA)	30.0/33.0 [762/838]	#10 OJAL
CAFE/BLANCO	36.0/39.0 [914/991]	.25[6.4] BANDERA
CAFE	36.0/39.0 [914/991]	.25[6.4] BANDERA
BLANCO	36.0/39.0 [914/991]	.50[12.7] FORRO
NEGRO	36.0/39.0 [914/991]	.50[12.7] FORRO
AZUL	36.0/39.0 [914/991]	.50[12.7] FORRO
ROJO	36.0/39.0 [914/991]	.50[12.7] FORRO

INFORMACION DE CABLES

CARCASA - LOC	SEMI-CERRADO
TAPA - LOC	ABIERTO
CARCASA - LC	SEMI-CERRADO
TAPA - LC	ABIERTO

TIPO DE MOTOR

CLIENTE	DISTRIBUTION SERVICE

CARACTERISTICAS DE GEOMETRIA Y SIMBOLOS
- PLANICIDAD
- RECTITUD
- ANGULARIDAD
- PERPENDICULARIDAD (A ESCUADRA)
- PARALELISMO
- REDONDEZ (CIRCULARIDAD)
- CILINDRICIDAD
- PERFIL DE CUALQUIER SUPERFICIE
- PERFIL DE CUALQUIER LINEA
- VARIACION
- POSICION REAL
- CONCENTRICIDAD
- SIMETRIA

ASME Y14.5M 1994

REGAL-BELOIT CORPORATION (RBC) PROVEE ASISTENCIA TECNICA A NUESTROS CLIENTES EN VARIAS AREAS. DESDE QUE RBC NO RECIBE TODOS LOS DATOS EN RELACION AL USO Y A LA APLICACION DEL MOTOR, LA APLICACION ADECUADA DEL MOTOR DEBE SER DETERMINADA POR EL CLIENTE.

DIMENSIONES SIN TOLERANCIA SON DE REFERENCIA SOLAMENTE

DIBUJADO POR: J.RUPERT 08-19-1998
APROBADO POR: T.RILE 08-20-1998
TERCER ANGULO DE PROYECCION
FECHA EDS: 11-11-2011
REV. FORMATO: H

REGAL **REGAL-BELOIT CORPORATION**

DESCRIPCION: MODEL-RFHP-48FR OUTLINE

TAMAÑO: C
NUMERO DE DIBUJO: SA1036V1
ESCALA: NONE
HOJA: 1