Elektrim® Premium All-Purpose Motors (31N Series)

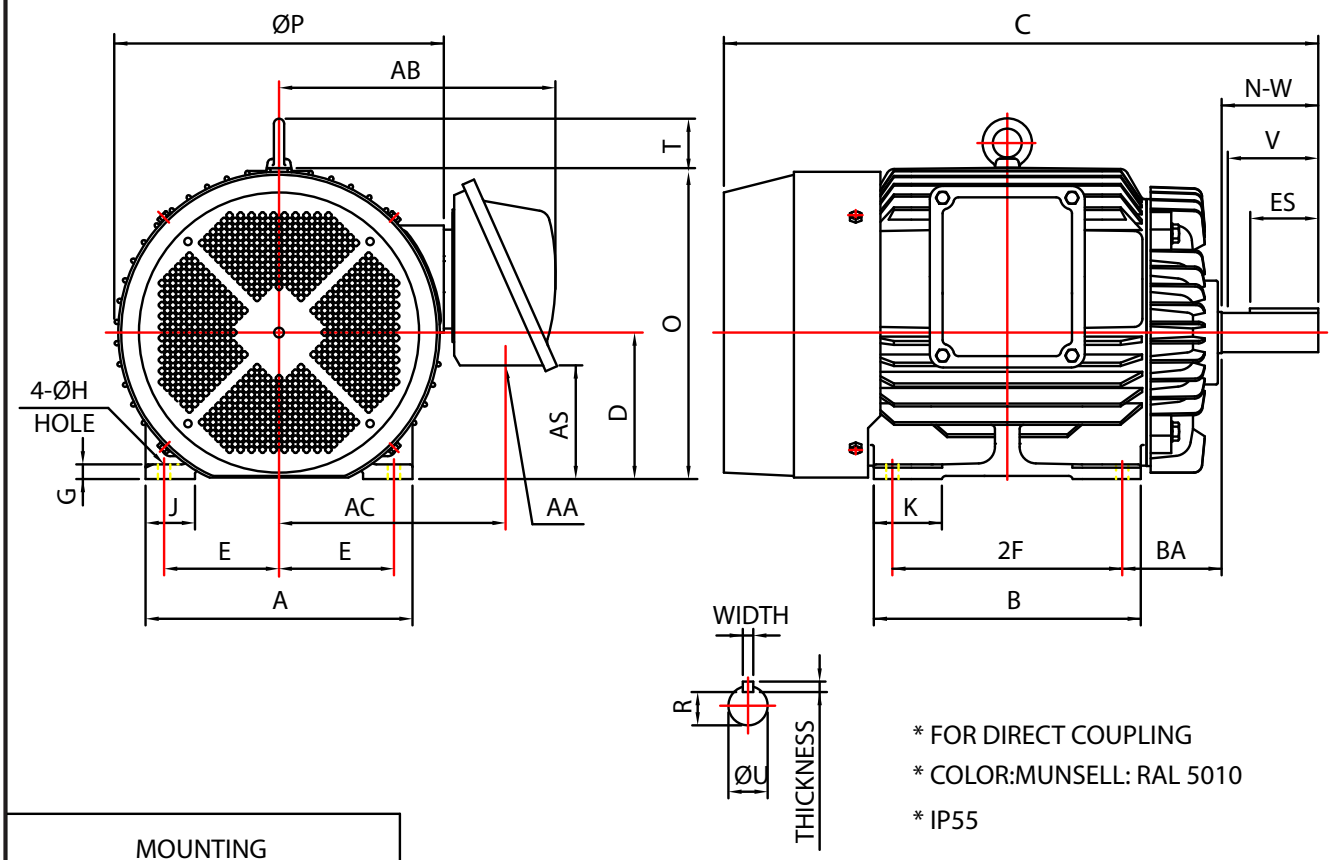

* FOR DIRECT COUPLING
* COLOR:MUNSELL: RAL 5010
* IP55

MOUNTING													
E	2F	H	BA	A	B	C	D	G	J	K	P	AA	AB
5.50	11.0	0.53	4.75	12.76	12.76	28.4	7.0	0.79	2.36	3.25	15.67	NPT1.5"	13.4

AC	AS	O+T	KEY			KEYSEAT	SHAFT EXTENSION			BEARING NO.		APPROX WEIGHT
			WIDTH	THICK-NESS	ES	R	N-W	U	V	D.E	O.D.E	
11.0	4.13	17.3	0.500	0.500	3.25	1.591	4.62	1.875	4.50	6310ZZ	6210ZZ	513 LBS

NOTE:1. TOLERANCE OF SHAFT END DIAMETER U: +0.000,-0.001
2. TOLERANCE OF SHAFT CENTER HEIGHT D: +0.000,-0.06
3. DIMENSION R TOLERANCE: +0.000,-0.015
4. DIMENSION V IS LENGTH OF STRAIGHT PART OF SHAFT.
5. CLASS INSULATION.

286T Footed